PENTUCKET SCHOOL DISTRICT
MAINTENANCE BUILDING

PREPARED FOR:

DORE + WHITTIER
260 MERRIMAC ST.
BUILDING 7, 2ND FLOOR
NEWBURYPORT, MA 01950

LOCATION MAP

SCALE: NOT TO SCALE

N

Bergman & Associates, Inc.
Engineers
20 WASHINGTON STREET
HAVERHILL, MA 01832-5524
(978) 372-1125 TEL

COMMONWEALTH OF MASSACHUSETTS
PAUL A. BERGMAN
No. 34699
REGISTERED PROFESSIONAL ENGINEER

SHEET INDEX

SHEET NUMBER	SHEET TITLE	ISSUE DATE	REVISION	ISSUE FOR
T	COVER SHEET	SEPT 28, 2021		PERMIT
C1	PROPOSED PLAN	SEPT 28, 2021		PERMIT
C2	DETAILS	SEPT 28, 2021		PERMIT
C3	DETAILS	SEPT 28, 2021		PERMIT
C4	DETAILS	SEPT 28, 2021		PERMIT
C5	DETAILS & PROFILES	SEPT 28, 2021		PERMIT
C6	CONTECH DETAILS	SEPT 28, 2021		PERMIT

PLANNING BOARD SUBMITTAL

LOCUS

NOT TO SCALE

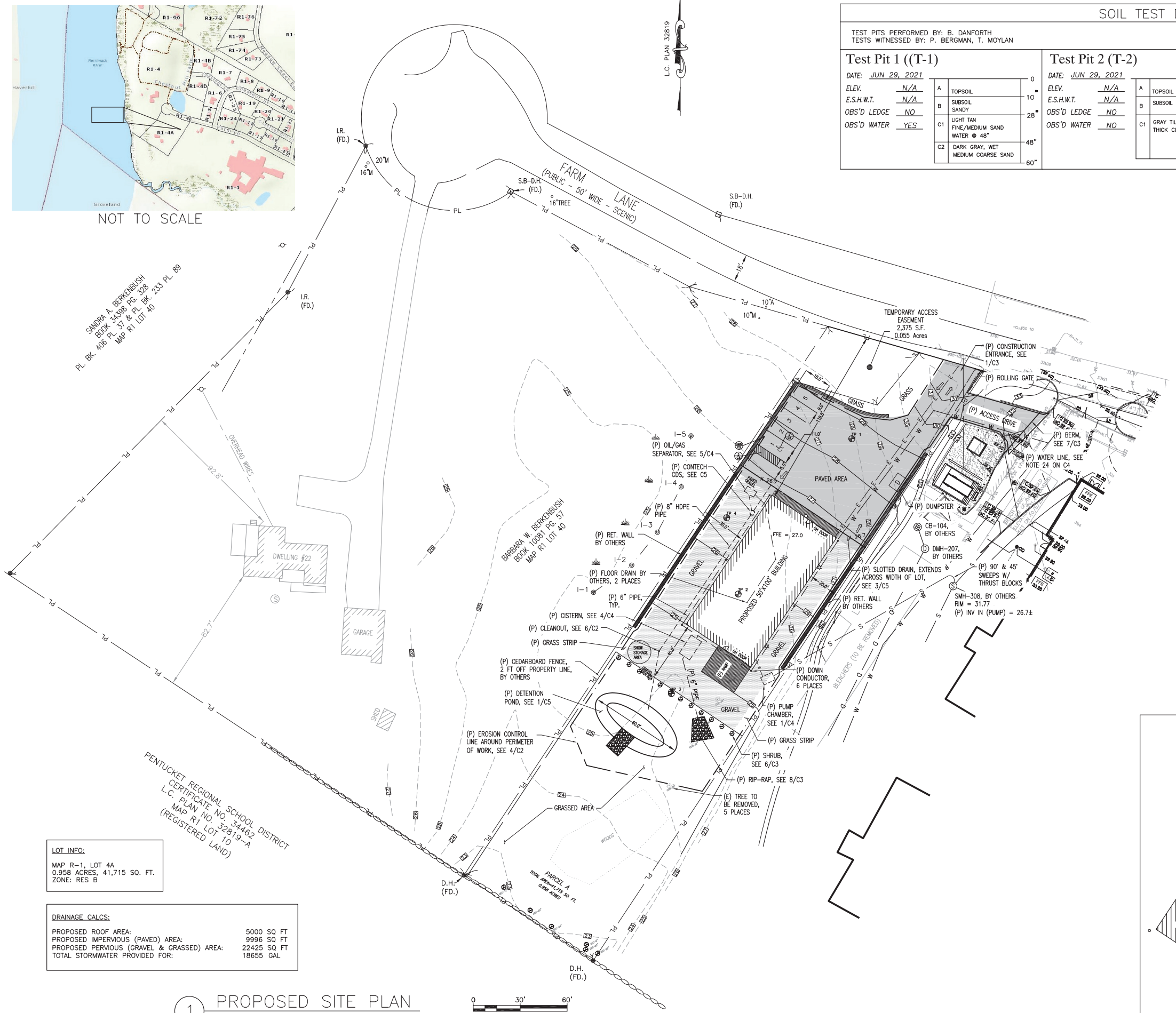

SOIL TEST DATA

TEST PITS PERFORMED BY: B. DANFORTH
TESTS WITNESSED BY: P. BERGMAN, T. MOYLAN

Test Pit 1 ((T-1)

DATE: JUN 29, 2021
ELEV. N/A
E.S.H.W.T. N/A
OBS'D LEDGE NO
OBS'D WATER YES

		0"
A	TOPSOIL	10"
B	SUBSOIL SANDY	28"
C1	LIGHT TAN FINE/MEDIUM SAND WATER @ 48"	48"
C2	DARK GRAY, WET MEDIUM COARSE SAND	60"

Test Pit 2 (T-2)

DATE: JUN 29, 2021
ELEV. N/A
E.S.H.W.T. N/A
OBS'D LEDGE NO
OBS'D WATER NO

		0"
A	TOPSOIL	14"
B	SUBSOIL	30"
C1	GRAY TILL THICK CLAY	56"

Test Pit 3 (T-3)

DATE: JUN 29, 2021
ELEV. N/A
E.S.H.W.T. N/A
OBS'D LEDGE NO
OBS'D WATER NO

		0"
A	TOPSOIL	8"
B	SUBSOIL SANDY	26"
C	GRAY TILL THICK CLAY	54"

Test Pit 4 (T-4)

DATE: JUN 29, 2021
ELEV. N/A
E.S.H.W.T. N/A
OBS'D LEDGE NO
OBS'D WATER NO

		0"
A	TOPSOIL	8"
B	SUBSOIL	24"
C	GRAY TILL THICK CLAY	54"

LEGEND

25	EXISTING CONTOUR
PL	EXISTING PROPERTY LINE
	EXISTING CHAIN LINK FENCE
	EXISTING WETLAND
	EXISTING WETLAND FLAG
	EXIST. TREE TO BE REMOVED
	EXISTING STONE BOUND
	EXISTING SEWER MANHOLE
	EXISTING UTILITY POLE W/LIGHT
1	TEST PIT LOCATION
D	PROPOSED DRAIN LINE
W	PROPOSED WATER LINE
S	PROPOSED SEWER LINE
E	PROPOSED ELECTRIC LINE
92	PROPOSED CONTOUR
	PROPOSED EOP
	PROPOSED EROSION CONTROL
	PROPOSED CHAIN LINK FENCE
	PROPOSED CEDARBOARD FENCE
X 91.0	PROPOSED SPOT ELEVATION
	PROPOSED LIGHT POST
	PROPOSED SHRUB
	PROPOSED GRAVEL AREA
	PROPOSED PAVED AREA

LOT INFO:

MAP R-1, LOT 4A
0.958 ACRES, 41,715 SQ. FT.
ZONE: RES B

DRAINAGE CALCS:

PROPOSED ROOF AREA:	5000 SQ FT
PROPOSED IMPERVIOUS (PAVED) AREA:	9996 SQ FT
PROPOSED PERVIOUS (GRAVEL & GRASSED) AREA:	22425 SQ FT
TOTAL STORMWATER PROVIDED FOR:	18655 GAL

1 PROPOSED SITE PLAN
SCALE: 1" = 30'

0 30' 60'

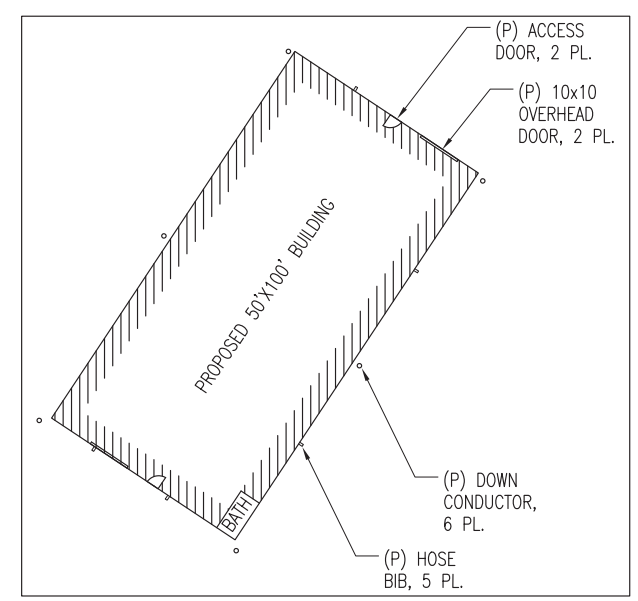

Bergman & Associates, Inc.
Engineers
20 WASHINGTON STREET
HAVERHILL, MA 01832-5524
(978) 372-1125 TEL

PROJECT: PSD MAINTENANCE BUILDING
FARM LANE
WEST NEWBURY, MA 01985

CLIENT: DORE + WHITTIER
260 MERRIMAC ST
NEWBURYPORT, MA 01950

REV. NO.	DATE	REVISION DESCRIPTION	MADE BY	CHKD BY	APVD BY

COMMONWEALTH OF MASSACHUSETTS
PAUL A. BERGMAN No. 34596
REGISTERED PROFESSIONAL ENGINEER

DRAWN BY: T. MOYLAN
DATE: 09/28/21
DRAWING NO.: C1
CHECKED BY: P. BERGMAN
ISSUE FOR: PERMIT
DRAWING TITLE: SHEET 2 OF 7
APPROVED BY: P. BERGMAN
PROJECT NO.: 2311
SITE PLAN

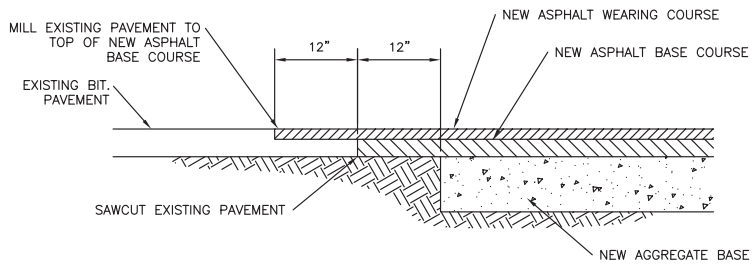

1 / C2 PAVEMENT JOINT DETAIL N.T.S.

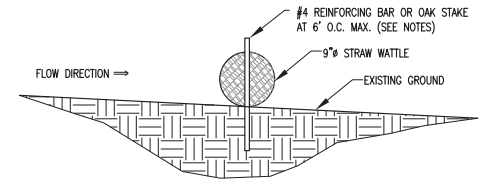

NOTES:

1. SECURE THE WATTLE WITH #4 REINFORCING BARS EVERY 6' AND WITH A BAR ON EACH END. BARS SHOULD BE DRIVEN THROUGH THE MIDDLE OF THE WATTLE LEAVING AT LEAST 2"-3" OF BAR EXTENDING ABOVE THE WATTLE. BARS SHOULD BE DRIVEN PERPENDICULAR TO SLOPE FACE. ADJACENT WATTLES SHOULD TIGHTLY ABUT.

4 / C2 STRAW WATTLE DETAIL N.T.S.

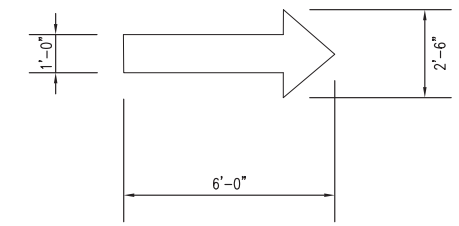

PAVEMENT MARKING NOTES

1. THE SURFACE SHALL BE DRY AND FREE OF SAND, GRAVEL AND OTHER FOREIGN SUBSTANCES PRIOR TO PAINTING.

2. BITUMINOUS CONCRETE PAVEMENTS SHALL HAVE BEEN IN PLACE FOR A MINIMUM OF 48 HOURS PRIOR TO THE APPLICATON OF PAVEMENT MARKINGS.

3. STRIPING SHALL BE HIGH CONTRAST PAINT. PAINT SHALL BE WHITE CHLORINATED-RUBBER BASE TRAFFIC LANE-MARKING PAINT COMPLYING WITH AASHTO M248 TYPE I, FACTORY MIXED, QUICK-DRYING AND NON-BLEEDING.

4. PAINT SHALL BE APPLIED WITH MECHANICAL EQUIPMENT TO PRODUCE UNIFORM STRAIGHT EDGES.

5. PROVIDE A MINIMUM OF 12 TO 15 MILS DRY THICKNESS.

6. PROTECT MARKINGS UNTIL SUFFICIENTLY DRY TO BEAR TRAFFIC.

7 / C2 PAVEMENT MARKING DETAILS N.T.S.

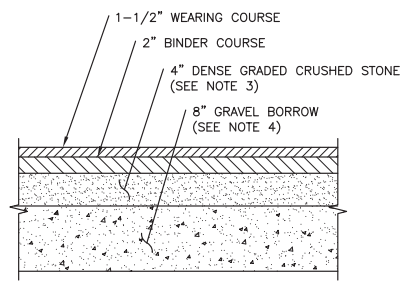

2 / C2 TYPICAL PAVEMENT SECTION N.T.S.

ROADWAY CONSTRUCTION STANDARDS

1. WORK SHALL BE IN CONFORMANCE WITH LATEST EDITION OF MASS HIGHWAY "STANDARD SPECIFICATIONS FOR HIGHWAYS AND BRIDGES".

2. BITUMINOUS CONCRETE PAVEMENT SHALL CONFORM TO SECTION 460 "CLASS I BITUMINOUS CONCRETE PAVEMENT, TYPE I-1".

3. DENSE GRADED CRUSHED STONE SHALL CONFORM TO SECTION M2.01.7 "DENSE GRADED CRUSHED STONE FOR SUB-BASE".

4. GRAVEL BORROW SHALL CONFORM TO SECTION M1.03.0 "GRAVEL BORROW", TYPE b.

5. GRAVEL SHALL BE COMPACTED TO 95% MAX DRY DENSITY IN ACCORDANCE WITH AASHTO T 180 "STANDARD METHOD OF TEST FOR MOISTURE-DENSITY RELATIONS OF SOILS USING 10 POUND RAMMER AND 18 INCH DROP"

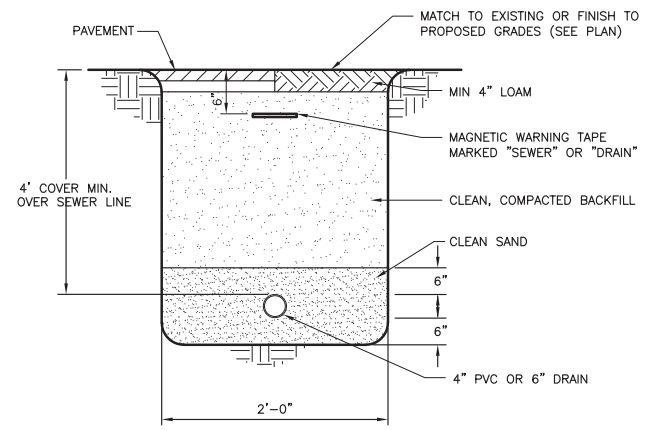

NOTES:

1. DRAIN LINES SHALL BE 6" ADS N-12 CORRUGATED PIPE OR EQUIVALENT.

TRENCH NOTES

1. BEDDING AND HAUNCHING MATERIAL SHALL BE ANGULAR CRUSHED ROCK CONFORMING TO ASTM D 2321-05 CLASS 1A OR 1B, OR OTHER MATERIAL ACCEPTABLE TO THE ENGINEER. 100% OF MATERIAL SHALL PASS A 1½-INCH SIEVE. PLACE AND COMPACT BEDDING TO FIRM, BUT NOT HARD, CONDITION. PLACE AND COMPACT (90% MAX DRY DENSITY, STD PROCTOR, ASTM D698/AASHTO T-99) HAUNCHING MATERIAL IN SIX (6) INCH MAX LIFTS TO SPRINGLINE OF PIPE. WORK IN AND AROUND PIPE BY HAND TO PROVIDE UNIFORM SUPPORT.

2. FOR PIPE SECTIONS BENEATH PAVED AREAS, INITIAL AND FINAL BACKFILL SHALL CONFORM TO ASTM D 2321-05 CLASS 1A OR 1B (CRUSHED ROCK) OR CLASS II (CLEAN SAND AND GRAVEL). PLACE AND COMPACT (95% MAX DRY DENSITY, STD PROCTOR, ASTM D698/AASHTO T-99) MATERIAL IN SIX (6) INCH MAX LIFTS. DURING INITIAL BACKFILLING, AVOID USING COMPACTION EQUIPMENT ON OR DIRECTLY OVER PIPE.

3. FOR CROSS-COUNTRY PIPE, INITIAL BACKFILL SHALL CONFORM TO SPECIFICATION ABOVE. EXCAVATED MATERIAL OR ORDINARY BORROW, ACCEPTABLE TO THE ENGINEER, MAY BE USED FOR FINAL BACKFILLING. MATERIAL SHALL NOT CONTAIN STONES LARGER THAN 4 INCH. PLACE AND COMPACT (95% MAX DRY DENSITY, STD PROCTOR, ASTM D698/AASHTO T-99) MATERIAL IN SIX (6) INCH MAX LIFTS.

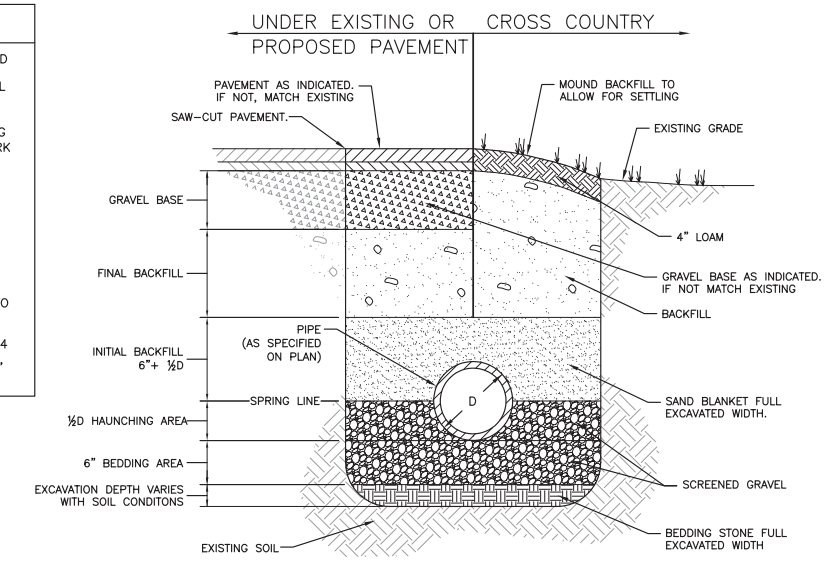

5 / C2 TRENCH DETAILS, TYP. N.T.S.

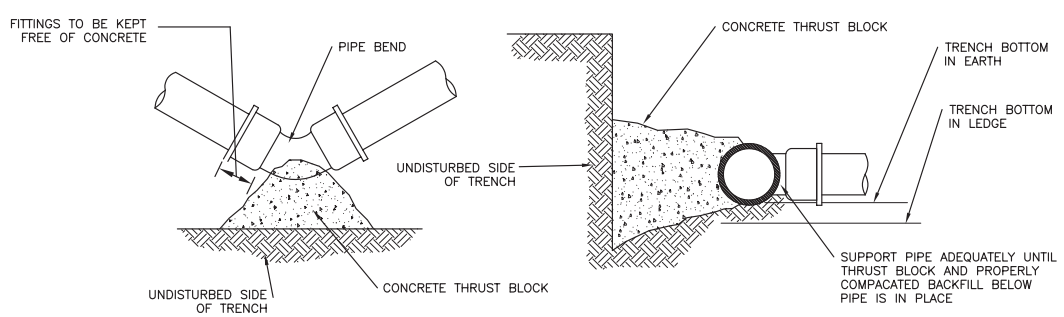

PLAN – BEND

TYPICAL SECTION
(FOR TEES, BENDS & DEAD ENDS)

3 / C2 THRUST BLOCK DETAIL N.T.S.

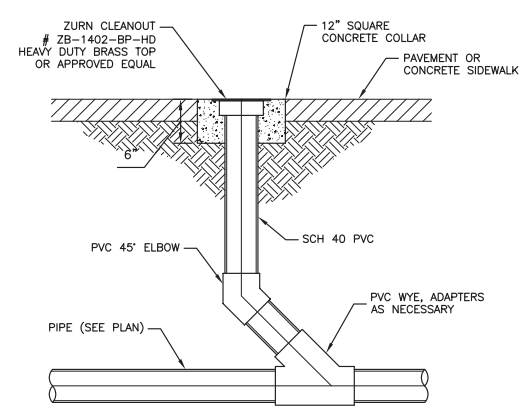

6 / C2 TYPICAL CLEANOUT DETAIL N.T.S.

NOTES:

1. WIRE MESH GUARDS, OR EQUIVALENT, SHALL BE INSTALLED PRIOR TO THE OUTLETS FOR EACH CLEANOUT TO PREVENT DEBRIS FROM ENTERING THE PIPE.

2. REFER TO MANUFACTURER FOR RECOMMENDED INSTALLATION GUIDELINES.

Bergman & Associates, Inc. Engineers
20 WASHINGTON STREET
HAVERHILL, MA 01832-5524
(978) 372-1125 TEL

PROJECT: PSD MAINTENANCE BUILDING
FARM LANE
WEST NEWBURY, MA 01985

CLIENT: DORE + WHITTIER
260 MERRIMAC ST
NEWBURYPORT, MA 01950

REV. NO.	DATE	REVISION DESCRIPTION	MADE BY	CHK'D BY	APV'D BY

COMMONWEALTH OF MASSACHUSETTS PAUL A. BERGMAN No. 34690 REGISTERED PROFESSIONAL ENGINEER

DRAWN BY: T. MOYLAN
DATE: 09/28/21
DRAWING NO.: C2
CHECKED BY: P. BERGMAN
ISSUE FOR: PERMIT
DRAWING TITLE: SHEET 3 OF 7
APPROVED BY: P. BERGMAN
PROJECT NO.: 2311
DETAILS

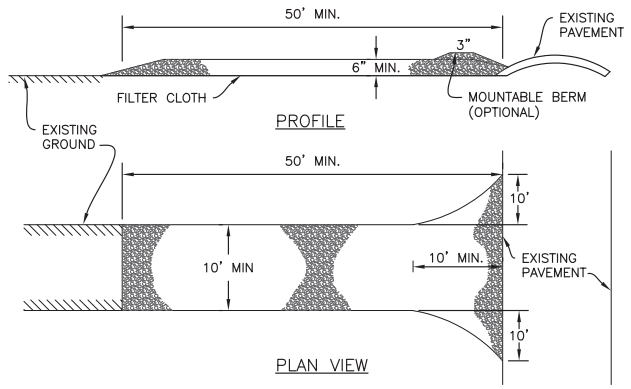

CONSTRUCTION SPECIFICATIONS

1. STONE FOR STABILIZED CONSTRUCTION ENTRANCE SHALL BE 1 TO 2 INCH STONE, RECLAIMED STONE, OR RECYCLED CONCRETE EQUIVALENT.

2. THE LENGTH OF THE STABLIZED ENTRANCE SHALL NOT BE LESS THAN 50 FEET, EXCEPT FOR A SINGLE RESIDENTIAL LOT WHERE A 30 FOOT MINIMUM LENGTH WOULD APPLY.

3. THE THICKNESS OF THE STONE FOR THE STABILIZED ENTRANCE SHALL NOT BE LESS THAN 6 INCHES.

4. THE WIDTH OF THE ENTRANCE SHALL NOT BE LESS THAN THE FULL WIDTH OF THE ENTRANCE WHERE INGRESS AND EGRESS OCCURS, OR 10 FEET, WHICHEVER IS GREATER.

5. GEOTEXTILE FILTER CLOTH SHALL BE PLACED OVER THE ENTIRE AREA PRIOR TO PLACING THE STONE. FILTER CLOTH IS NOT REQUIRED FOR A SINGLE FAMILY RESIDENCE LOT.

6. SURFACE WATER THAT IS FLOWING TO OR DIVERTED TOWARD THE CONSTRUCTION ENTRANCE SHALL BE PIPED BENEATH THE ENTRANCE. IF PIPING IS IMPRACTICAL, A BERM WITH 5:1 SLOPES, THAT CAN BE CROSSED BY VEHICLES, MAY BE SUBSTITUTED FOR THE PIPE.

7. THE ENTRANCE SHALL BE MAINTAINED IN A CONDITION THAT WILL PREVENT TRACKING OR FLOWING OF SEDIMENT ONTO PUBLIC RIGHTS-OF-WAY. THIS MAY REQUIRE PERIODIC TOPDRESSING WITH ADDITIONAL STONE AS CONDITIONS DEMAND, AND REPAIR AND/OR CLEANOUT OF ANY MEASURES USED TO TRAP SEDIMENT. SEDIMENT SPILLED, WASHED, OR TRACKED ONTO PUBLIC RIGHTS-OF-WAY SHALL BE REMOVED PROMPTLY

1 / C3 STABILIZED CONSTRUCTION ENTRANCE N.T.S.

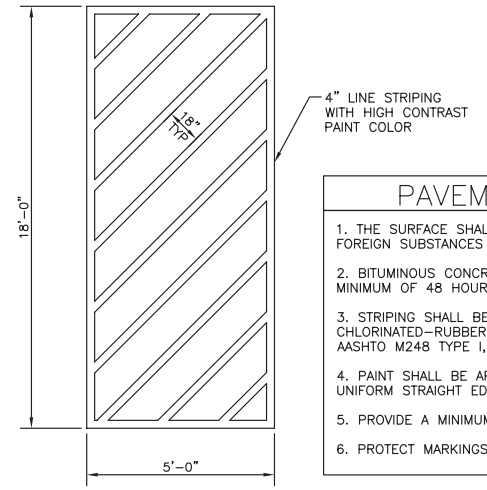

PAVEMENT MARKING NOTES

1. THE SURFACE SHALL BE DRY AND FREE OF SAND, GRAVEL AND OTHER FOREIGN SUBSTANCES PRIOR TO PAINTING.

2. BITUMINOUS CONCRETE PAVEMENTS SHALL HAVE BEEN IN PLACE FOR A MINIMUM OF 48 HOURS PRIOR TO THE APPLICATON OF PAVEMENT MARKINGS.

3. STRIPING SHALL BE HIGH CONTRAST PAINT. PAINT SHALL BE WHITE CHLORINATED-RUBBER BASE TRAFFIC LANE-MARKING PAINT COMPLYING WITH AASHTO M248 TYPE I, FACTORY MIXED, QUICK-DRYING AND NON-BLEEDING.

4. PAINT SHALL BE APPLIED WITH MECHANICAL EQUIPMENT TO PRODUCE UNIFORM STRAIGHT EDGES.

5. PROVIDE A MINIMUM OF 12 TO 15 MILS DRY THICKNESS.

6. PROTECT MARKINGS UNTIL SUFFICIENTLY DRY TO BEAR TRAFFIC.

3 / C3 ACCESS AISLE AND CROSSWALK PAVEMENT PAINTING N.T.S.

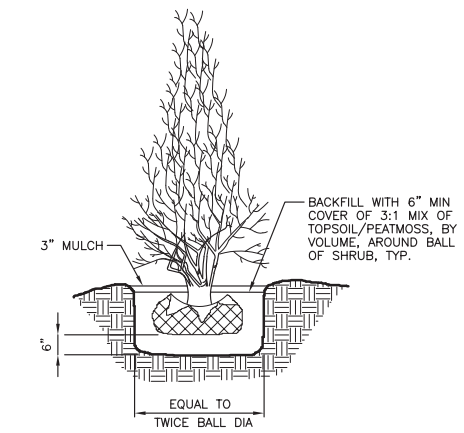

6 / C3 SHRUB DETAIL N.T.S.

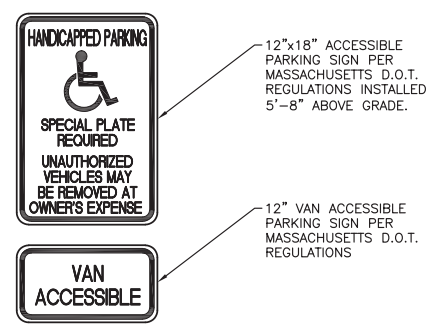

4 / C3 VAN ACCESSIBLE SIGN N.T.S.

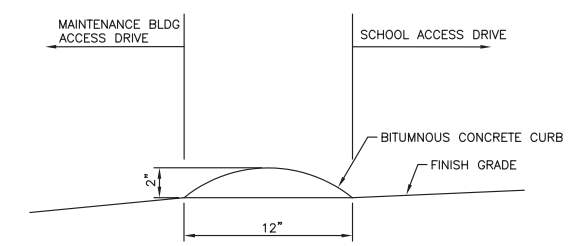

7 / C3 BERM DETAIL N.T.S.

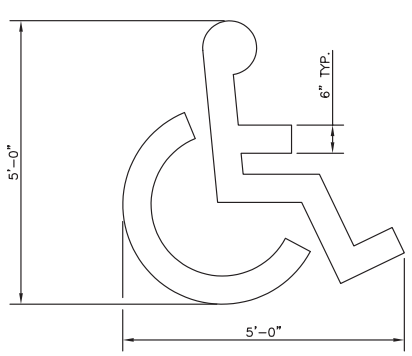

NOTES:
1. SYMBOL SHALL FACE VEHICLE TRAVEL AISLE.

2. SEE PAVEMENT MARKING NOTES FOR PAVEMENT PAINTING.

2 / C3 ACCESSIBLE PARKING SPACE SYMBOL N.T.S.

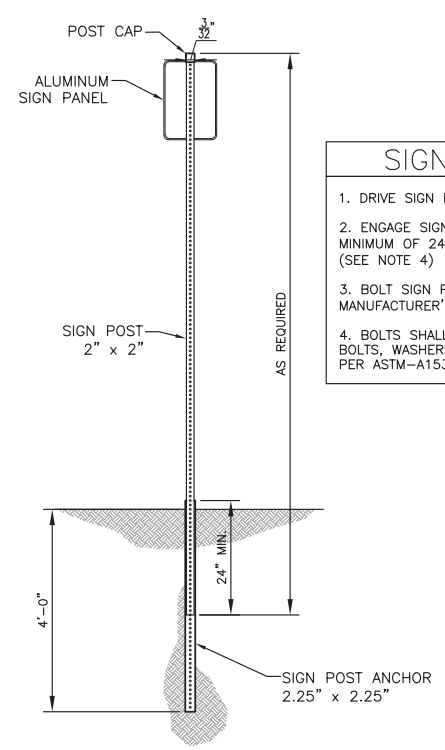

SIGN POST NOTES

1. DRIVE SIGN POST ANCHOR TO A DEPTH OF 4'

2. ENGAGE SIGN POST INTO SIGN POST ANCHOR A MINIMUM OF 24". BOLT TOGETHER WITH (2) BOLTS. (SEE NOTE 4)

3. BOLT SIGN PANEL TO POST ACCORDING TO PANEL MANUFACTURER'S RECOMMENDATIONS.

4. BOLTS SHALL CONFORM TO ASTM-A307, CLASS A. BOLTS, WASHERS AND NUTS SHALL BE GALVANIZED PER ASTM-A153.

5 / C3 TYPICAL SIGN POST DETAIL 1" = 1'

PIPE DIAMETER	X	Y
24", 30", & 36"	10'	8'
15" & 18"	7'	5'

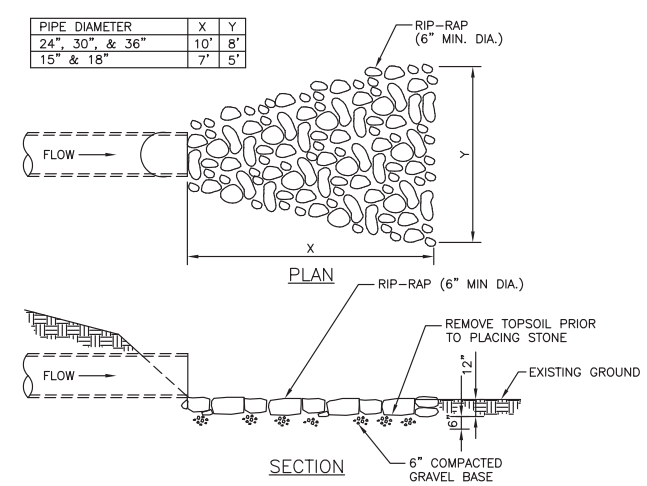

RIP-RAP NOTES

STONES SHALL BE SIZED SO THAT NOT LESS THAN 60 PERCENT SHALL HAVE ONE DIMENSION 12" OR MORE. CHINK BY HAND TO MAKE A REASONABLY SMOOTH AND SHAPED SURFACE.

8 / C3 RIP-RAP DETAIL N.T.S.

Bergman & Associates, Inc. Engineers
20 WASHINGTON STREET
HAVERHILL, MA 01832-5524
(978) 372-1125 TEL

PROJECT: PSD MAINTENANCE BUILDING
FARM LANE
WEST NEWBURY, MA 01985

CLIENT: DORE + WHITTIER
260 MERRIMAC ST
NEWBURYPORT, MA 01950

REV. NO.	DATE	REVISION DESCRIPTION	MADE BY	CHK'D BY	APV'D BY

COMMONWEALTH OF MASSACHUSETTS PAUL BERGMAN No. 34889 REGISTERED PROFESSIONAL ENGINEER

DRAWN BY: T. MOYLAN
DATE: 09/28/21
DRAWING NO.: C3
CHECKED BY: P. BERGMAN
ISSUE FOR: PERMIT
DRAWING TITLE: DETAILS
SHEET 4 OF 7
APPROVED BY: P. BERGMAN
PROJECT NO.: 2311

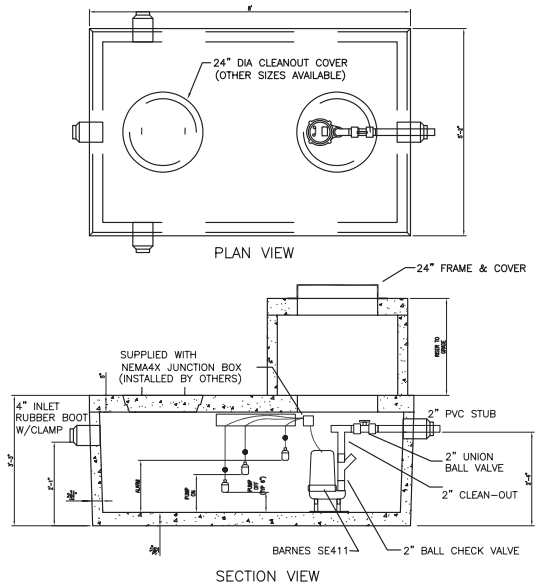

NOTES:
1. CONCRETE: 4,000 PSI MINIMUM AFTER 28 DAYS.
2. DESIGN CONFORMS WITH 310 CMR 15.226, DEP TITLE 5 REGS, FOR PUMP CHAMBERS.
3. ALL REINFORCEMENT PER ASTM C1227.
4. JOINT SEALED WITH BUTYL RESIN.
5. IF COVER EXCEEDS 4 FEET, HEAVY DUTY TANK REQUIRED. ALSO AVAILABLE IN AASHTO HS-20 LOADING.
6. PUMPS, FLOATS, AND PIPE INSTALLED IN CHAMBER. FLOAT ELEVATIONS SET UPON REQUEST.
7. SUPPLIED WITH PUMP CONTROL PANEL W/ALARM.
8. ADDITIONAL PUMPS & DUPLEX CONFIGURATION AVAILABLE.

1 / C4 SHEA SIMPLEX 500 GALLON PUMP CHAMBER N.T.S.

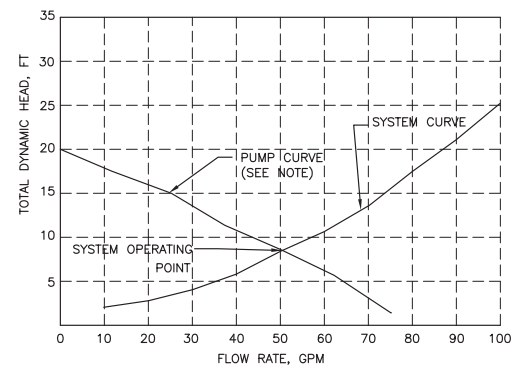

SYSTEM INFORMATION

FLOW RATE, GPM	PIPE HEAD LOSS, FT	VELOCITY FT/SEC	TOTAL DYNAMIC HEAD, FT
10	0.23	1.09	2.80
20	0.91	2.17	3.48
30	2.05	3.26	4.62
40	3.64	4.35	6.21
50	5.69	5.43	8.26
60	8.19	6.52	10.76
70	11.15	7.61	13.72
80	14.57	8.69	17.14
90	18.43	9.78	21.00
100	22.76	10.86	25.33

NOTE: PIPE LOSS CALCULATED FOR FRICTION LOSS AND PROPOSED FITTINGS

DESIGN FLOW	25 GPD
DOSE VOLUME	6.25 GAL
RESERVE CAPACITY	407 GAL
ALARM ON	12.29 INCHES
PUMP ON	6.29 INCHES
PUMP OFF	6.00 INCHES

NOTE:

HEAD VERSUS DISCHARGE CURVE SHOWN FOR A BARNES SE411 0.4 HP PUMP.

2 / C4 PUMP SYSTEM INFORMATION N.T.S.

PROJECT NOTES:

1. TOPO AND BOUNDARY SURVEY DONE BY OTHERS.

2. THE CONTRACTOR SHALL HAVE THE EXPERTISE TO EXECUTE WORK INDICATED ON THE DRAWINGS OR SHALL HIRE QUALIFIED HELP.

3. THE CONTRACTOR SHALL VERIFY AND COORDINATE DIMENSIONS RELATED TO THIS PROJECT.

4. REQUESTS FOR CHANGES TO THE DRAWINGS FROM CLIENT, THE CONTRACTORS, ETC., OR ANY OTHER PARTY MUST BE MADE IN WRITING TO THE ENGINEER, OR ANY OTHER CHANGES TO DRAWINGS MADE ON THE SITE MUST BE FOLLOWED UP IN WRITING TO THE ENGINEER.

5. NOT ALL EXISTING UTILITIES MAY BE SHOWN ON THESE DRAWINGS. LOCATIONS AND/OR ELEVATIONS OF UNDERGROUND UTILITIES ARE FROM PLANS BY OTHERS AND/OR LIMITED SITE SURVEY. LOCATIONS, INVERTS, ETC, SHALL BE VERIFIED BY CONTRACTOR PRIOR TO CONSTRUCTION. ANY DISCREPANCIES FROM THE INFORMATION ON THESE DRAWINGS SHALL BE BROUGHT TO THE ATTENTION OF THE ENGINEER. IT IS THE RESPONSIBILITY OF THE CONTRACTOR TO CONTACT DIG-SAFE, PRIVATE UTILITIES, TOWNS AND CITIES, ETC, TO IDENTIFY, LOCATE AND MARK UTILITIES PRIOR TO CONSTRUCTION. CONTRACTOR SHALL BE RESPONSIBLE FOR THE PROTECTION OF SUCH UTILITIES, AND, IF DAMAGED DURING THE COURSE OF THE WORK, SHALL REPAIR TO THE SATISFACTION OF THE OWNER.

6. REMOVE AND PROPERLY DISPOSE OF TRASH AND DEBRIS GENERATED BY THE CONSTRUCTION.

7. WORK SHALL CONFORM TO THE REQUIREMENTS OF THE LATEST EDITION OF THE "MASSACHUSETTS STATE BUILDING CODE" (CMR 780) AND THE CONTRACT DOCUMENTS. IN CASE OF CONFLICT, THE MORE STRINGENT REQUIREMENT SHALL GOVERN.

8. RESTORE AND REPAIR ANY DAMAGED OR DISTURBED AREAS TO EXISTING CONDITIONS.

9. HAND-DIG IN AREAS OF EXISTING UNDERGROUND UTILITIES.

10. TAKE NECESSARY PRECAUTIONS TO CONTROL DUST AND NOISE.

11. INSTALL WARNING TAPE 6"± BELOW GROUND LEVEL OVER PROPOSED UNDERGROUND UTILITY LINES.

12. CONTRACTOR SHALL VERIFY THE LOCATION AND RELATIVE ELEVATIONS OF THE BENCH MARKS PRIOR TO COMMENCEMENT OF CONSTRUCTION. ANY DISCREPANCIES SHALL BE REPORTED TO THE ENGINEER.

13. BACKFILL AND COMPACT MATERIAL IN 8 INCH LIFTS.

14. NEATLY SAW-CUT PAVEMENT IN AFFECTED AREA. REPAIR PAVEMENT TO MATCH EXISTING; CONCRETE AND ASPHALT, SIDEWALKS AND STREET.

15. CISTERN DETAILS SHOWN ARE SCHEMATIC ONLY. FINAL DESIGN BY OTHERS.

16. TIGHT JOINT PIPING SHALL CONSIST OF PVC SCH 40 UNLESS OTHERWISE NOTED.

17. SANITARY SEWER CONNECTIONS SHALL BE LAID AT LEAST 10 FEET APART FROM ANY NEW OR EXISTING WATER SERVICE.

18. WHERE THE VERTICAL SEPARATION OF CROSSING SEWER AND WATER LINES IS LESS THAN 18 INCHES, ENCASE WATER LINE IN 6 INCHES OF 3000 P.S.I. CONCRETE. EXTEND ENCASEMENT FOR FIVE FEET IN EACH DIRECTION.

19. ON PROPOSED DRAINAGE SYSTEM, PROVIDE SCREEN GUARDS AS NECESSARY TO PREVENT LEAVES AND DEBRIS FROM ENTERING DRYWELL.

20. PROVIDE 4 FT (MIN) COVER FOR WATER LINE.

21. UTILITY LINES SHALL BE INSTALLED IN ACCORDANCE TO TOWN OF WEST NEWBURY STANDARDS.

22. INSTALLATIONS SHALL BE COORDINATED WITH THE APPLICABLE TOWN DEPARTMENTS.

23. INTERIOR FLOOR DRAINS AND FLOOR PITCH BY OTHERS.

24. POTABLE AND FIRE SUPPRESSION WATER LINES TO BE PROVIDED. LINE SIZE, MATERIAL, CONNECTION, AND DETAIL BY OTHERS.

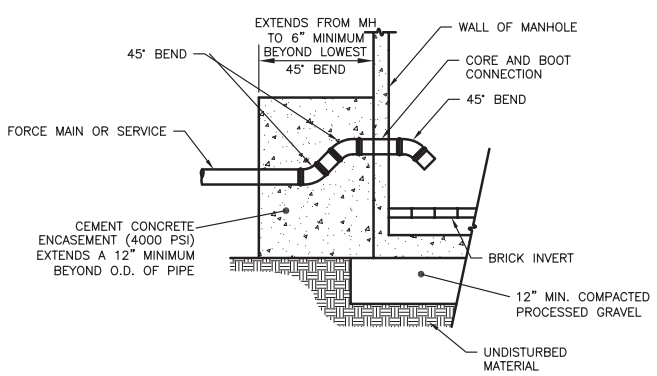

3 / C4 FORCE MAIN SEWER CONNECTION N.T.S.

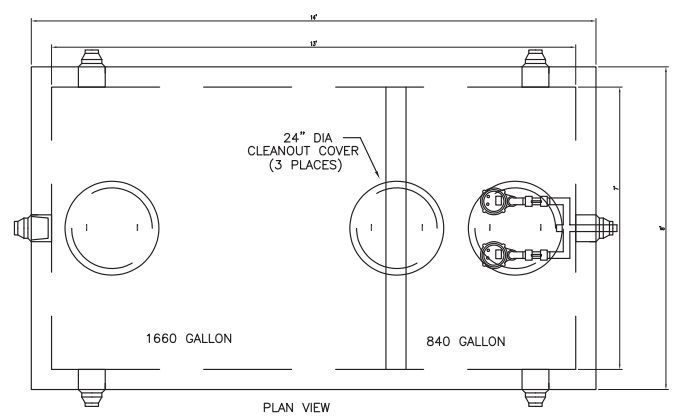

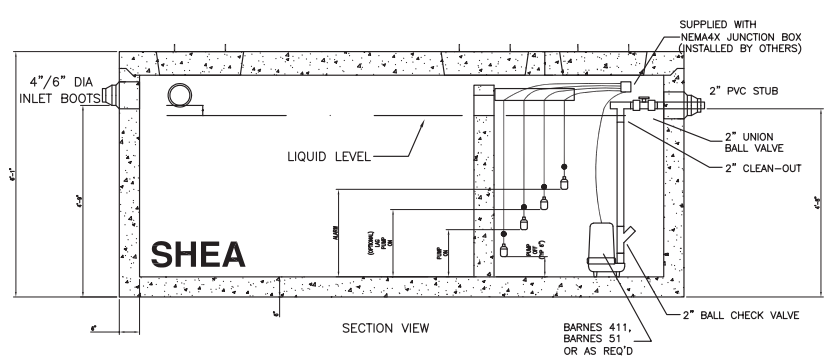

NOTES:
1. CONCRETE: 5,000 PSI MINIMUM AFTER 28 DAYS.
2. DESIGN CONFORMS WITH 310 CMR 15.00, DEP TITLE 5 REGS, FOR SEPTIC TANKS.
4. BAFFLE WALL OPTIONAL FOR TWO COMPARTMENT TANKS.
5. DESIGNED FOR AASHTO HS-20 LOADING, COVER 1 TO 5 FEET.
6. TONGUE & GROOVE JOINT SEALED WITH BUTYL RESIN.
7. TEES AND BAFFLES SOLD SEPARATELY.
8. PUMP AND FILTRATION TO BE DESIGNED AND INSTALLED BY OTHERS.

4 / C4 2500 GALLON SHEA CONCRETE CISTERN WITH DUPLEX PUMP N.T.S.

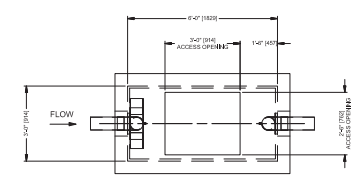

PLAN VIEW
(MEDIA NOT SHOWN FOR CLARITY)

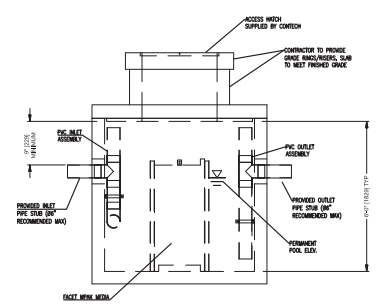

ELEVATION VIEW

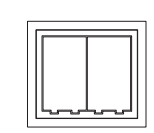

30" x 36" [762 x 914] ACCESS HATCH

VCL30 RATED TREATMENT CAPACITY IS 110 GPM [6.93 l/s], OR PER LOCAL REGULATIONS. IF THE SITE CONDITIONS EXCEED RATED TREATMENT CAPACITY, AN UPSTREAM BYPASS STRUCTURE IS REQUIRED.

THE VORTCLAREX SYSTEM SHALL REMOVE ESSENTIALLY ALL FREE AND DISPERSED NON-EMULSIFIED OIL FROM THE WATER STREAM AND PRODUCE A DESIRED EFFLUENT BASED ON AN OIL DROPLET TYPICAL OF THE SITE.

THE VORTCLAREX SYSTEM SHALL BE DESIGNED IN ACCORDANCE WITH STOKES LAW AND API BULLETIN NO. 421.

THE STANDARD INLET/OUTLET CONFIGURATION IS SHOWN. FOR OTHER CONFIGURATION OPTIONS, PLEASE CONTACT YOUR CONTECH ENGINEERED SOLUTIONS LLC REPRESENTATIVE. www.ContechES.com

GENERAL NOTES
1. CONTECH TO PROVIDE ALL MATERIALS UNLESS NOTED OTHERWISE.
2. FOR FABRICATION DRAWINGS WITH DETAILED STRUCTURE DIMENSIONS AND WEIGHT, PLEASE CONTACT YOUR CONTECH ENGINEERED SOLUTIONS LLC REPRESENTATIVE. www.ContechES.com
3. VORTCLAREX WATER QUALITY STRUCTURE SHALL BE IN ACCORDANCE WITH ALL DESIGN DATA AND INFORMATION CONTAINED IN THIS DRAWING. CONTRACTOR TO CONFIRM STRUCTURE MEETS REQUIREMENTS OF PROJECT.
4. STRUCTURE SHALL MEET AASHTO HS20 AND CASTINGS SHALL MEET AASHTO M306 LOAD RATING, ASSUMING GROUNDWATER ELEVATION AT, OR BELOW, THE OUTLET PIPE INVERT ELEVATION. ENGINEER OF RECORD TO CONFIRM ACTUAL GROUNDWATER ELEVATION.
5. INLET AND OUTLET PIPES MUST BE PERPENDICULAR TO THE VAULT TO ALLOW CONNECTION WITH PROVIDED PIPE STUBS.
6. FLOW LINE IN AND OUT OF THE VORTCLAREX IS RECOMMENDED TO BE AT THE SAME ELEVATION.
7. ALTERNATE UNITS ARE IN MILLIMETERS UNLESS NOTED OTHERWISE.

INSTALLATION NOTES
1. ANY SUB-BASE, BACKFILL DEPTH, AND/OR ANTI-FLOTATION PROVISIONS ARE SITE-SPECIFIC DESIGN CONSIDERATIONS AND SHALL BE SPECIFIED BY ENGINEER OF RECORD.
2. CONTRACTOR TO PROVIDE EQUIPMENT WITH SUFFICIENT LIFTING AND REACH CAPACITY TO LIFT AND SET THE VORTCLAREX STRUCTURE (LIFTING CLUTCHES PROVIDED).
3. CONTRACTOR TO INSTALL JOINT SEALANT BETWEEN ALL STRUCTURE SECTIONS AND ASSEMBLE STRUCTURE.
4. CONTRACTOR TO PROVIDE AND INSTALL FERNCO, OR EQUIVALENT, COUPLER TO MATE EXISTING TRUNKLINE TO THE PROVIDED PIPE STUBS. MATCH PIPE INVERTS WITH ELEVATIONS SHOWN.

NOTE: DEVICE SHALL BE THIS DETAIL OR EQUIVALENT. PROVIDE HS-20 LOADING.

5 / C4 CONTECH OIL & WATER SEPARATOR N.T.S.

Bergman & Associates, Inc.
Engineers
20 WASHINGTON STREET
HAVERHILL, MA 01832-5524
(978) 372-1125 TEL

PROJECT: PSD MAINTENANCE BUILDING
FARM LANE
WEST NEWBURY, MA 01985

CLIENT: DORE + WHITTIER
260 MERRIMAC ST
NEWBURYPORT, MA 01950

REV. NO.	DATE	REVISION DESCRIPTION	MADE BY	CHK'D BY	APV'D BY

COMMONWEALTH OF MASSACHUSETTS
PAUL A. BERGMAN
No. 34009
REGISTERED PROFESSIONAL ENGINEER

DRAWN BY: T. MOYLAN	CHECKED BY: P. BERGMAN	APPROVED BY: P. BERGMAN	DETAILS
DATE: 09/28/21	ISSUE FOR: PERMIT	PROJECT NO.: 2311	
DRAWING NO.: C4	DRAWING TITLE:	SHEET 5 OF 7	

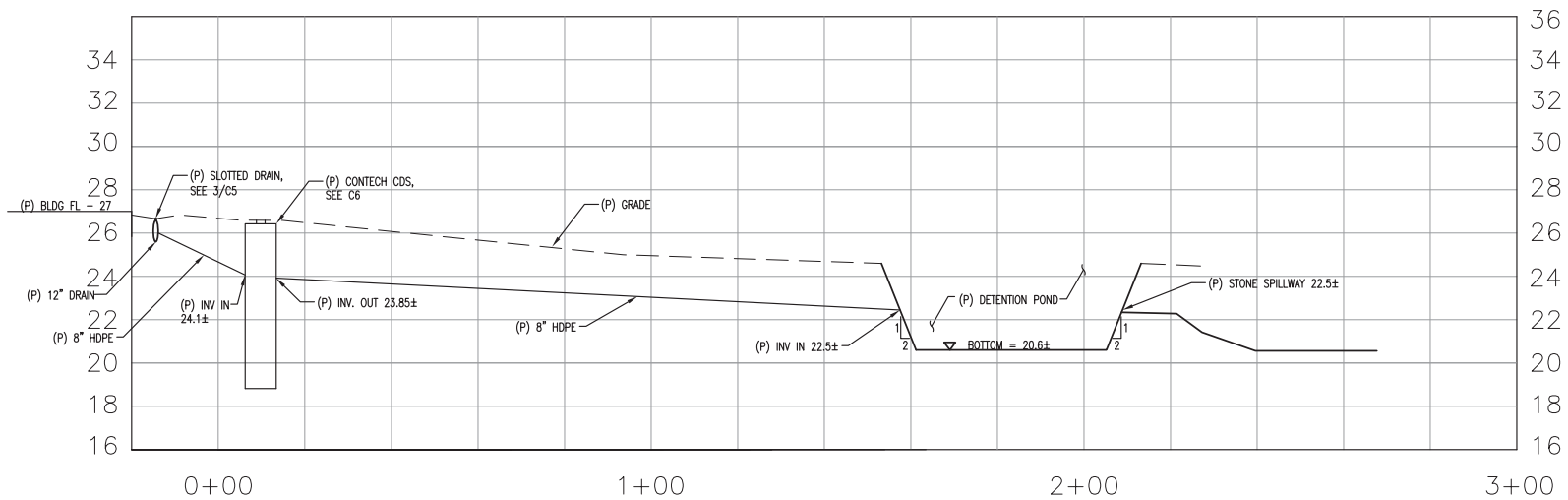

1 PROPOSED PROFILE – DETENTION POND

HORIZONTAL SCALE: 1" = 20'
VERTICAL SCALE: 1" = 4'

DETENTION POND NOTES:

1. POND SHALL BE 4" LOAM AND HYDROSEED.
2. ENTRANCE (INLET) AND EXIT (SPILLWAY) OF POND SHALL BE RIP–RAP.
3. SEE POLLUTION PREVENTION PLAN FOR POND MAINTENANCE PROCEDURES AND SCHEDULE.

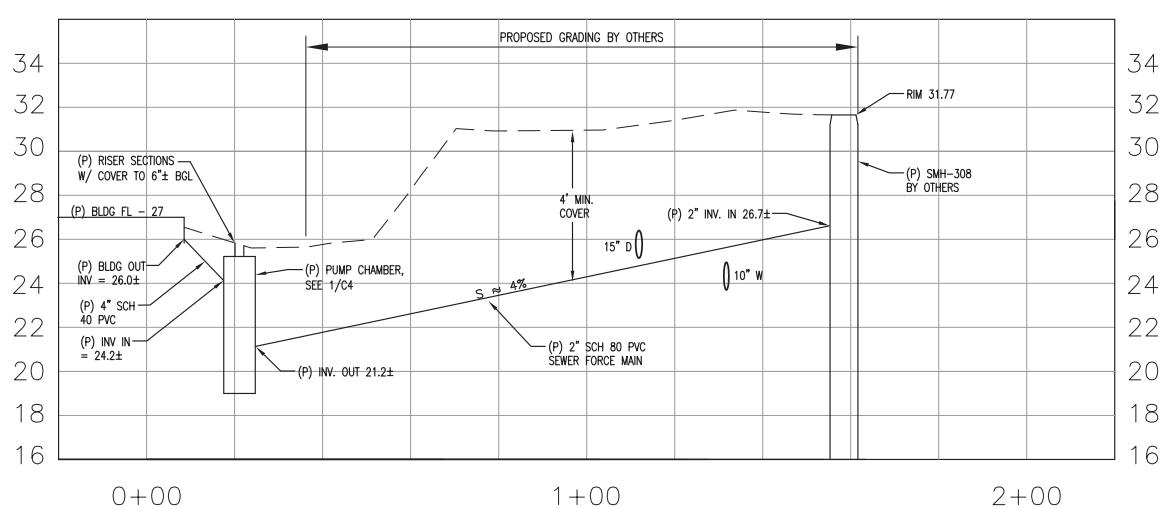

2 PROPOSED PROFILE – WASTEWATER

HORIZONTAL SCALE: 1" = 20'
VERTICAL SCALE: 1" = 4'

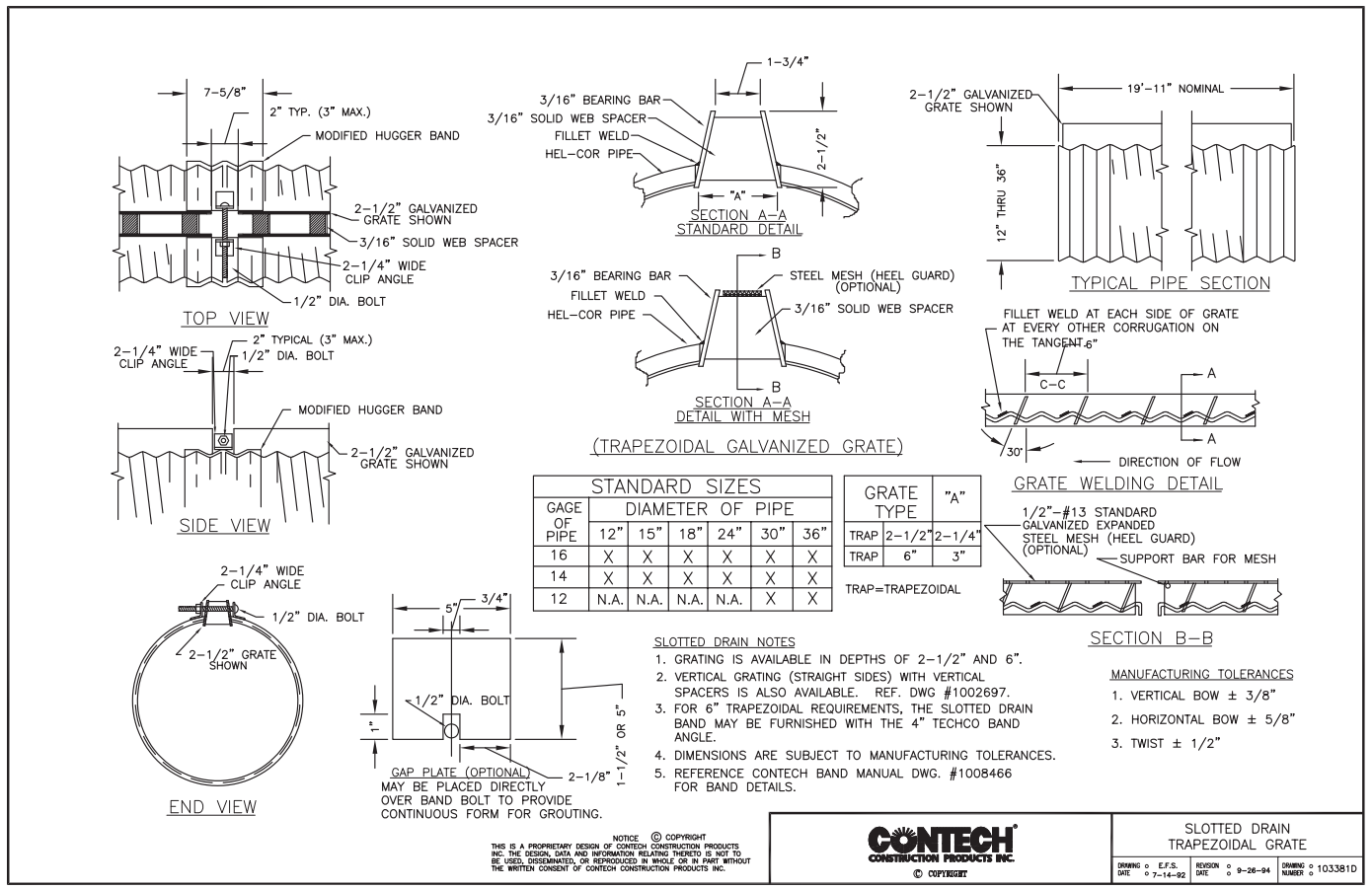

STANDARD SIZES						
GAGE OF PIPE	DIAMETER OF PIPE					
	12"	15"	18"	24"	30"	36"
16	X	X	X	X	X	X
14	X	X	X	X	X	X
12	N.A.	N.A.	N.A.	N.A.	X	X

GRATE TYPE		"A"
TRAP	2–1/2"	2–1/4"
TRAP	6"	3"

TRAP=TRAPEZOIDAL

SLOTTED DRAIN NOTES

1. GRATING IS AVAILABLE IN DEPTHS OF 2–1/2" AND 6".
2. VERTICAL GRATING (STRAIGHT SIDES) WITH VERTICAL SPACERS IS ALSO AVAILABLE. REF. DWG #1002697.
3. FOR 6" TRAPEZOIDAL REQUIREMENTS, THE SLOTTED DRAIN BAND MAY BE FURNISHED WITH THE 4" TECHCO BAND ANGLE.
4. DIMENSIONS ARE SUBJECT TO MANUFACTURING TOLERANCES.
5. REFERENCE CONTECH BAND MANUAL DWG. #1008466 FOR BAND DETAILS.

MANUFACTURING TOLERANCES

1. VERTICAL BOW ± 3/8"
2. HORIZONTAL BOW ± 5/8"
3. TWIST ± 1/2"

NOTICE © COPYRIGHT
THIS IS A PROPRIETARY DESIGN OF CONTECH CONSTRUCTION PRODUCTS INC. THE DESIGN, DATA AND INFORMATION RELATING THERETO IS NOT TO BE USED, DISSEMINATED, OR REPRODUCED IN WHOLE OR IN PART WITHOUT THE WRITTEN CONSENT OF CONTECH CONSTRUCTION PRODUCTS INC.

CONTECH CONSTRUCTION PRODUCTS INC. © COPYRIGHT

SLOTTED DRAIN TRAPEZOIDAL GRATE

DRAWING DATE: E.F.S. 7–14–92 | REVISION DATE: 9–26–94 | DRAWING NUMBER: 103381D

3/C5 CONTECH SLOTTED DRAIN N.T.S.

Bergman & Associates, Inc. Engineers
20 WASHINGTON STREET
HAVERHILL, MA 01832–5524
(978) 372–1125 TEL

PROJECT: PSD MAINTENANCE BUILDING
FARM LANE
WEST NEWBURY, MA 01985

CLIENT: DORE + WHITTIER
260 MERRIMAC ST
NEWBURYPORT, MA 01950

REV. NO.	DATE	REVISION DESCRIPTION	MADE BY	CHKD BY	APVD BY

COMMONWEALTH OF MASSACHUSETTS PAUL P. BERGMAN No. 34699 REGISTERED PROFESSIONAL ENGINEER

DRAWN BY: T. MOYLAN
DATE: 09/28/21
DRAWING NO.: C5
CHECKED BY: P. BERGMAN
ISSUE FOR: PERMIT
APPROVED BY: P. BERGMAN
PROJECT NO.: 2311
DRAWING TITLE: DETAILS
SHEET 6 OF 7

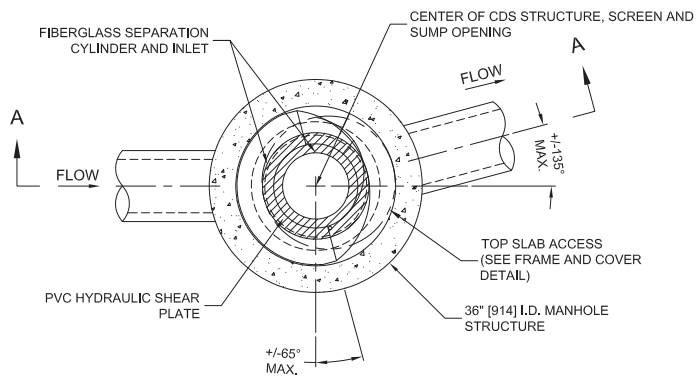

PLAN VIEW B-B
N.T.S.

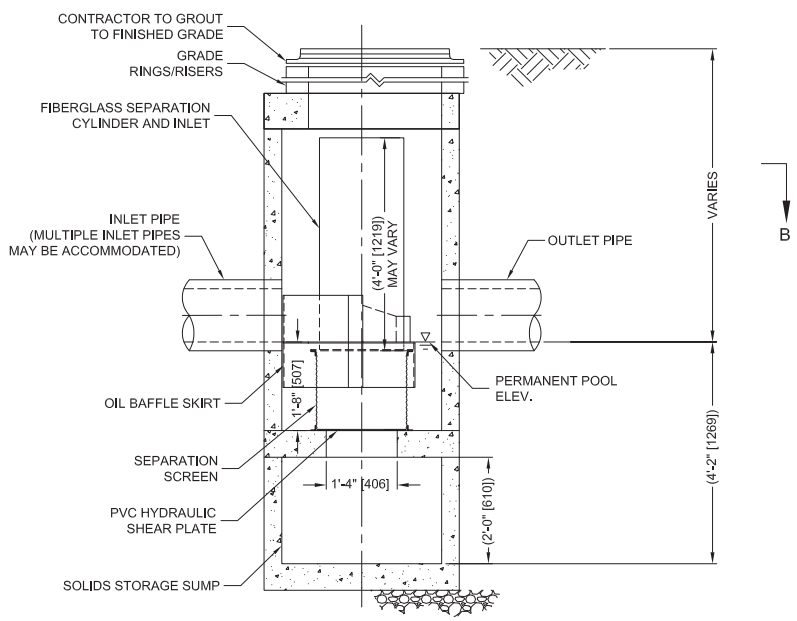

ELEVATION A-A
N.T.S.

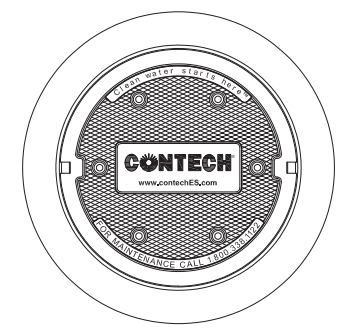

FRAME AND COVER
(DIAMETER VARIES)
N.T.S.

CDS1515-3-C DESIGN NOTES

CDS1515-3-C RATED TREATMENT CAPACITY IS 1.0 CFS, OR PER LOCAL REGULATIONS.

THE STANDARD CDS1515-3-C CONFIGURATION IS SHOWN.

SITE SPECIFIC DATA REQUIREMENTS

STRUCTURE ID			*
WATER QUALITY FLOW RATE (CFS OR L/s)			*
PEAK FLOW RATE (CFS OR L/s)			*
RETURN PERIOD OF PEAK FLOW (YRS)			*
SCREEN APERTURE (2400 OR 4700)			*
PIPE DATA:	I.E.	MATERIAL	DIAMETER
INLET PIPE 1	*	*	*
INLET PIPE 2	*	*	*
OUTLET PIPE	*	*	*
RIM ELEVATION			*
ANTI-FLOTATION BALLAST	WIDTH	HEIGHT	
	*	*	
NOTES/SPECIAL REQUIREMENTS:			
* PER ENGINEER OF RECORD			

GENERAL NOTES
1. CONTECH TO PROVIDE ALL MATERIALS UNLESS NOTED OTHERWISE.
2. FOR SITE SPECIFIC DRAWINGS WITH DETAILED STRUCTURE DIMENSIONS AND WEIGHT, PLEASE CONTACT YOUR CONTECH ENGINEERED
3. CDS WATER QUALITY STRUCTURE SHALL BE IN ACCORDANCE WITH ALL DESIGN DATA AND INFORMATION CONTAINED IN THIS DRAWING. CONTRACTOR TO CONFIRM STRUCTURE MEETS REQUIREMENTS OF PROJECT.
4. STRUCTURE SHALL MEET AASHTO HS20 LOAD RATING, ASSUMING EARTH COVER OF 0' - 2', AND GROUNDWATER ELEVATION AT, OR BELOW, THE OUTLET PIPE INVERT ELEVATION. ENGINEER OF RECORD TO CONFIRM ACTUAL GROUNDWATER ELEVATION. CASTINGS SHALL MEET AASHTO M306 AND BE CAST WITH THE CONTECH LOGO..
5. IF REQUIRED, PVC HYDRAULIC SHEAR PLATE IS PLACED ON SHELF AT BOTTOM OF SCREEN CYLINDER. REMOVE AND REPLACE AS NECESSARY DURING MAINTENANCE CLEANING.
6. CDS STRUCTURE SHALL BE PRECAST CONCRETE CONFORMING TO ASTM C-478 AND AASHTO LOAD FACTOR DESIGN METHOD.

INSTALLATION NOTES
A. ANY SUB-BASE, BACKFILL DEPTH, AND/OR ANTI-FLOTATION PROVISIONS ARE SITE-SPECIFIC DESIGN CONSIDERATIONS AND SHALL BE SPECIFIED BY ENGINEER OF RECORD.
B. CONTRACTOR TO PROVIDE EQUIPMENT WITH SUFFICIENT LIFTING AND REACH CAPACITY TO LIFT AND SET THE CDS MANHOLE STRUCTURE.
C. CONTRACTOR TO INSTALL JOINT SEALANT BETWEEN ALL STRUCTURE SECTIONS AND ASSEMBLE STRUCTURE.
D. CONTRACTOR TO PROVIDE, INSTALL, AND GROUT INLET AND OUTLET PIPE(S). MATCH PIPE INVERTS WITH ELEVATIONS SHOWN. ALL PIPE CENTERLINES TO MATCH PIPE OPENING CENTERLINES.
E. CONTRACTOR TO TAKE APPROPRIATE MEASURES TO ASSURE UNIT IS WATER TIGHT, HOLDING WATER TO FLOWLINE INVERT MINIMUM. IT IS SUGGESTED THAT ALL JOINTS BELOW PIPE INVERTS ARE GROUTED.

CONTECH ENGINEERED SOLUTIONS LLC
www.contechES.com
9025 Centre Pointe Dr., Suite 400, West Chester, OH 45069
513-645-7993 FAX

CDS1515-3-C
ONLINE CDS
STANDARD DETAIL

THIS PRODUCT MAY BE PROTECTED BY ONE OR MORE OF THE RELATED FOREIGN PATENTS, OR OTHER PATENTS PENDING.

\\AD\CONTECH-CPI\COMROOT\STORMWATER\JURISDICTIONS\USA\MA_SDE DESIGN TOOLS_STANDARD DETAILS\CDS1515-3-C-OTL.DWG 6/6/2018 4:16 PM

Bergman & Associates, Inc.
Engineers
20 WASHINGTON STREET
HAVERHILL, MA 01832-5524
(978) 372-1125 TEL

PROJECT: PSD MAINTENANCE BUILDING
FARM LANE
WEST NEWBURY, MA 01985

CLIENT: DORE + WHITTIER
260 MERRIMAC ST
NEWBURYPORT, MA 01950

REV. NO.	DATE	REVISION DESCRIPTION	MADE BY	CHKD BY	APV'D BY

COMMONWEALTH OF MASSACHUSETTS
PAUL P. BERGMAN No. 34609
REGISTERED PROFESSIONAL ENGINEER

DRAWN BY: T. MOYLAN	CHECKED BY: P. BERGMAN	APPROVED BY: P. BERGMAN	
DATE: 09/28/21	ISSUE FOR: PERMIT	PROJECT NO.: 2311	DETAILS
DRAWING NO.: C6	DRAWING TITLE:	SHEET 7 OF 7	