DORE + WHITTIER
www.doreandwhittier.com

PROJECT ADDRESS

PENTUCKET REGIONAL SCHOOL
24 MAIN STREET
WEST NEWBURY, MA 01985

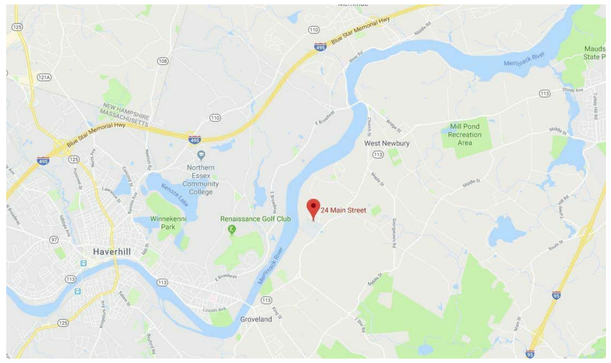

LOCUS MAP

OWNER

PENTUCKET REGIONAL SCHOOL DISTRICT
22 MAIN STREET
WEST NEWBURY, MA 01985
P: 508.822.1000

ARCHITECT

DORE & WHITTIER ARCHITECTS, INC.

260 MERRIMAC STREET
BUILDING 7, 2nd FLOOR
NEWBURYPORT, MA 01950
P: 978.499.2999
F: 978.499.2944

212 BATTERY STREET
BURLINGTON, VT 05401
P: 802.863.1428
F: 802.863.6955

CIVIL CONSULTANT

NITSCH ENGINEERING
2 CENTER PLAZA, SUITE 430
BOSTON, MA 0202108111
P: 617.338.0063
F: 617.338.6472

FOOD SERVICE CONSULTANT

CRABTREE McGRATH ASSOCIATES
161 WEST MAIN STREET
GEORGETOWN, MA 01833
P: 978.352.8500
F: 978.352.8588

MEP CONSULTANT

VANDERWEIL ENGINEERS
274 SUMMER STREET
BOSTON, MA 02210
P: 617.423.7423

FP CONSULTANT

VAV INTERNATIONAL
400 CUMMINGS PARK S-4700
WOBURN, MA 01801
P: 781.935.7228

ENVIRONMENTAL CONSULTANT

LEC ENVIRONMENTAL
0 LOWELL STREET, SUITE 101
WAKEFIELD, MA 01880
P: 781.245.2500

OWNER'S PROJECT MANAGER

THE VERTEX COMPANIES, INC.
400 LIBBEY PARKWAY
WEYMOUTH, MA 02189
P: 781.952.6000

ACOUSTICAL CONSULTANT

CAVANAUGH TOCCI ASSOCIATES
327 BOSTON POST ROAD,#F
SUDBURY, MA 01776
P: 978.443.8771

LANDSCAPE CONSULTANT

BROWN SARDINA
24 ROLAND STREET, FLR 2
BOSTON, MA 02129
P: 617.4824703

TECHNOLOGY CONSULTANT

EDVANCE TECHNOLOGY DESIGN, INC.
300 BRICKSTONE SQUARE
NORTH ANDOVER, MA 01880
P: 978.256.9900

THEATER CONSULTANT

SCHEU CONSULTING SERVICES, INC.
113 WOODBERRY LANE
FAYETTEVILLE, NY 13066
P: 315.214.4564
F: 315.266.9292

STRUCTURAL CONSULTANT

ENGINEERS DESIGN GROUP, INC.
350 MAIN ST., FLOOR 2
MALDEN, MA 02148
P: 781.396.9007
F: 781.396.9008

SUSTAINABLE DESIGN

THE GREEN ENGINEER
54 JUNCTION SQUARE DRIVE
CONCORD, MA 01742
P: 978.369.8978
F: 781.240.8003

HAZARDOUS MATERIALS

UNIVERSAL ENVIRONMENTAL CONSULTANTS
12 BREWSTER ROAD
FRAMINGHAM, MA 01702
P: 508.628.5486
F: 508.628.5488

DRAWING LIST

PROPOSED

PROPOSED SUPERIMPOSED OVER EXISTING CONDITIONS AERIAL PHOTO

EXISTING CONDITIONS AERIAL PHOTOGRAPH

PENTUCKET REGISTERED SCHOOL SITE ZONING TABLE

	Minimum Lot Area	Lot Frontage	% of Required Lot area as Contiguous	Min Front	Min. Side	Min Rear	Max Lot Cov.	Max Bldg Cov.	Max Height	
				Setbacks						
Res. B/C District	40,000/20,000	200'/150'	75'	40'	20'	20'	30%/35%	25%/30%	35'	
Existing - (to be demolished)	1.7 mil. +/- / 575,000 +/-	1150' / 255'	340' / 250'	340' / 250'	72' / 28'	440' / 1000' +/-	27% / 33%	10% / 12%	40' +/-	To Be Demolished
Proposed	No Change*	No Change*	No Change *	1020' / 450'	57' / 72'	91' / 1000' +/-	35% / 36%	7% / 1%	49'7"	

	Footprint area (Sqr. Ft)	Gross Floor Area (Sqr. Ft)	Number of Stories	Floor Elevations (Ft.)	Bulding Height (Ft.)
Proposed	104,839.00	211,700.00	3	33'	49'7"
Existing					
Middle School	115,000	115,000	1	45'	25' +/-
High School	104,000	147,000	2	43'	40' +/_

PARKING TABLE			
	EXISTING	ITE PARKING REQUIREMENT BASED ON NUMBER OF STUDENTS	PROPOSED
STANDARD	413		412
HANDICAP	9	9	14
TOTAL	422	425	426
PLANNED NUMBER OF STUDENTS			956
PROPOSED PARKING SPACES PER STUDENT			0.45

*West Newbury Zoning By-Law states no more than seventy-five (75) percent of the developed lot area not covered by building(s) shall be devoted to parking and loading spaces.

PENTUCKET REGIONAL SCHOOL DISTRICT BUILDING PROJECT

D&W PROJECT # 17-0762

24 MAIN STREET
WEST NEWBURY, MA 01985

PLANNING BOARD APPLICATION REVISED

1/24/2020 & 1/31/2020

Revised 02-03-2020

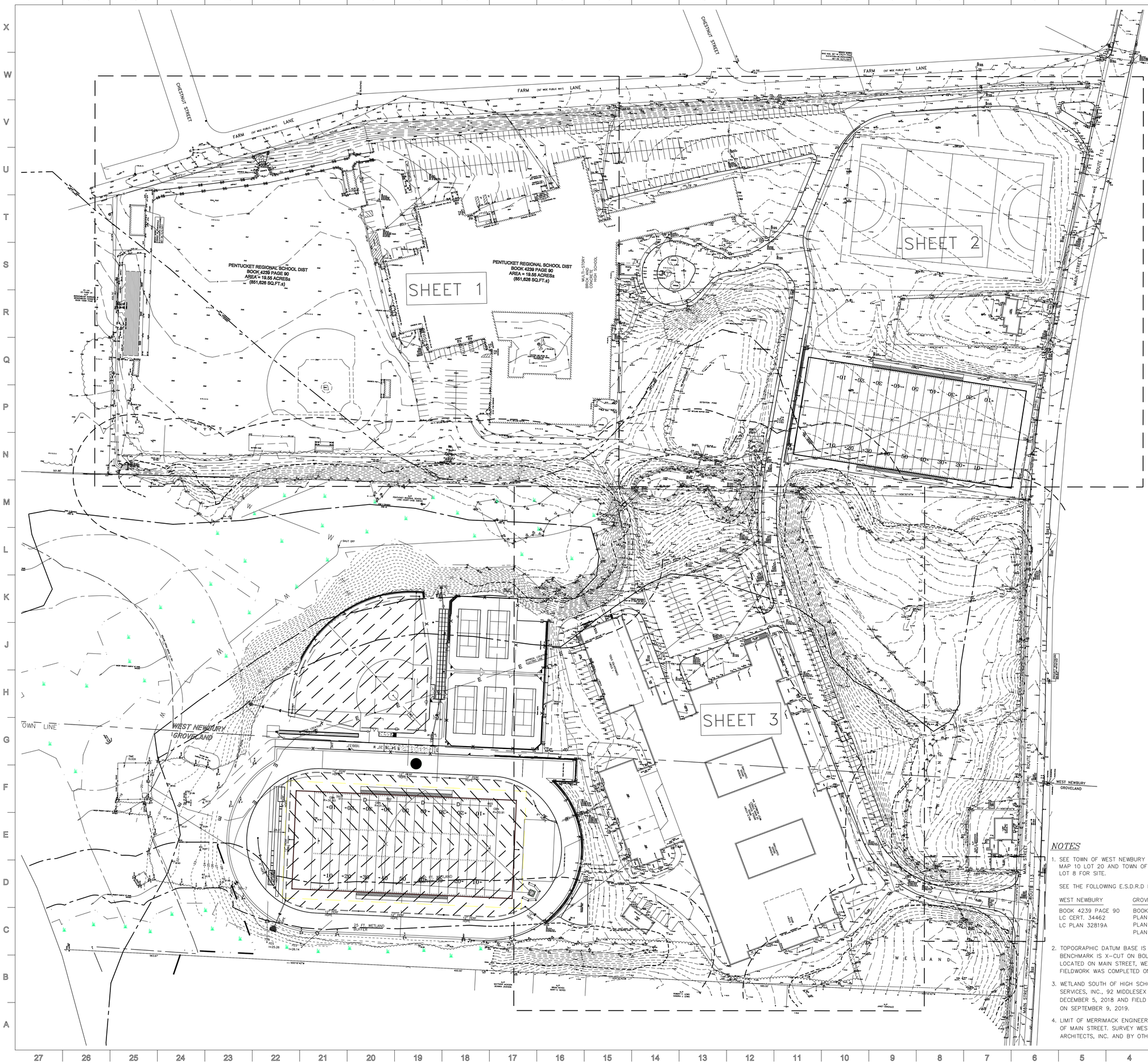

NOTES

1. SEE TOWN OF WEST NEWBURY ASSESSORS MAP 10 LOT 10, MAP 10 LOT 20 AND TOWN OF GROVELAND ASSESSORS MAP 2 LOT 8 FOR SITE.

   SEE THE FOLLOWING E.S.D.R.D REFERENCES:

WEST NEWBURY	GROVELAND
BOOK 4239 PAGE 90	BOOK 5086 PAGE 422
LC CERT. 34462	PLAN BOOK 287 PLAN 61
LC PLAN 32819A	PLAN 2285 (ENGINEERS OFFICE)
	PLAN 2287 (ENGINEERS OFFICE)

2. TOPOGRAPHIC DATUM BASE IS 1988 N.A.V.D. ESTABLISHED BY G.P.S. BENCHMARK IS X-CUT ON BOLT OVER MAIN OUTLET OF HYDRANT LOCATED ON MAIN STREET, WEST NEWBURY. ELEVATION=36.43. FIELDWORK WAS COMPLETED ON DECEMBER 14, 2018.
3. WETLAND SOUTH OF HIGH SCHOOL DELINEATED BY NORSE ENVIRONMENTAL SERVICES, INC., 92 MIDDLESEX ROAD-UNIT 4, TYNGSBORO, MA DATED DECEMBER 5, 2018 AND FIELD SURVEYED BY MERRIMACK ENGINEERING SERVICES ON SEPTEMBER 9, 2019.
4. LIMIT OF MERRIMACK ENGINEERING SERVICES GROUND SURVEY IS 700'± WEST OF MAIN STREET. SURVEY WEST OF THAT LIMIT PROVIDED BY DORE AND WHITTIER ARCHITECTS, INC. AND BY OTHER SURVEYORS.

DORE + WHITTIER

DORE + WHITTIER ARCHITECTS, INC.

MASSACHUSETTS
260 MERRIMAC ST. BUILDING 7, 2ND FLOOR
NEWBURYPORT, MA 01950
P: 978-499-2999

VERMONT
212 BATTERY STREET
BURLINGTON, VT 05401
P: 802.863.1428

SURVEY PREPARED BY:

MERRIMACK ENGINEERING SERVICES
68 PARK STREET
ANDOVER, MASSACHUSETTS 01810
PHONE: (978) 475-3555 FAX: (978) 475-1448
EMAIL: MERRENG@AOL.COM

PENTUCKET REGIONAL SCHOOL DISTRICT BUILDING PROJECT

24 MAIN ST.
WEST NEWBURY, MA 01985

PROJECT NUMBER: 17-0762

SEAL AND SIGNATURE:

COMMONWEALTH OF MASSACHUSETTS
STEPHEN E. STAPINSKI
#29876
PROFESSIONAL ENGINEER

Date: 12/19/19

REVISIONS:

NO.	DATE	TITLE

ISSUE TITLE AND DATE:

Survey issued 2/4/20
Original survey issued 12/19/19

KEY PLAN

SHT. 1	SHT. 2
SHT. 3	

ORIENTATION AND SCALE:

N

PROJECT NORTH

0 25' 50' 100'
SCALE: 1"=50' GRAPHIC SCALE

SHEET TITLE:

EXISTING CONDITIONS KEY PLAN

SHEET NUMBER:

EX0.00

12/11/2019 2:25:22 PM

DORE + WHITTIER

DORE + WHITTIER ARCHITECTS, INC.

MASSACHUSETTS
280 MERRIMAC ST, BUILDING 7, 2ND FLOOR
NEWBURYPORT, MA 01950
P: 978-499-2999

VERMONT
212 BATTERY STREET
BURLINGTON, VT 05401
P: 802.863.1428

SURVEY PREPARED BY:

MERRIMACK ENGINEERING SERVICES
66 PARK STREET
ANDOVER, MASSACHUSETTS 01810
PHONE (978) 475-3555 FAX: (978) 475-1448
EMAIL MERRENG@AOL.COM

PENTUCKET REGIONAL SCHOOL DISTRICT BUILDING PROJECT

24 MAIN ST.
WEST NEWBURY, MA 01985

PROJECT NUMBER: 17-0762

SEAL AND SIGNATURE:

STEPHEN E. STARNSKI #29876

Date: 12/19/19

REVISIONS:

NO.	DATE	TITLE

ISSUE TITLE AND DATE:

Survey issued 2/4/20
Original survey issued 12/19/19

KEY PLAN

SHT. 1

ORIENTATION AND SCALE:

N

PROJECT NORTH

0 10' 20' 40'
SCALE: 1"=20' GRAPHIC SCALE

SHEET TITLE:

EXISTING CONDITIONS PLAN

SHEET NUMBER:

EX0.01

12/11/2019 2:22:22 PM

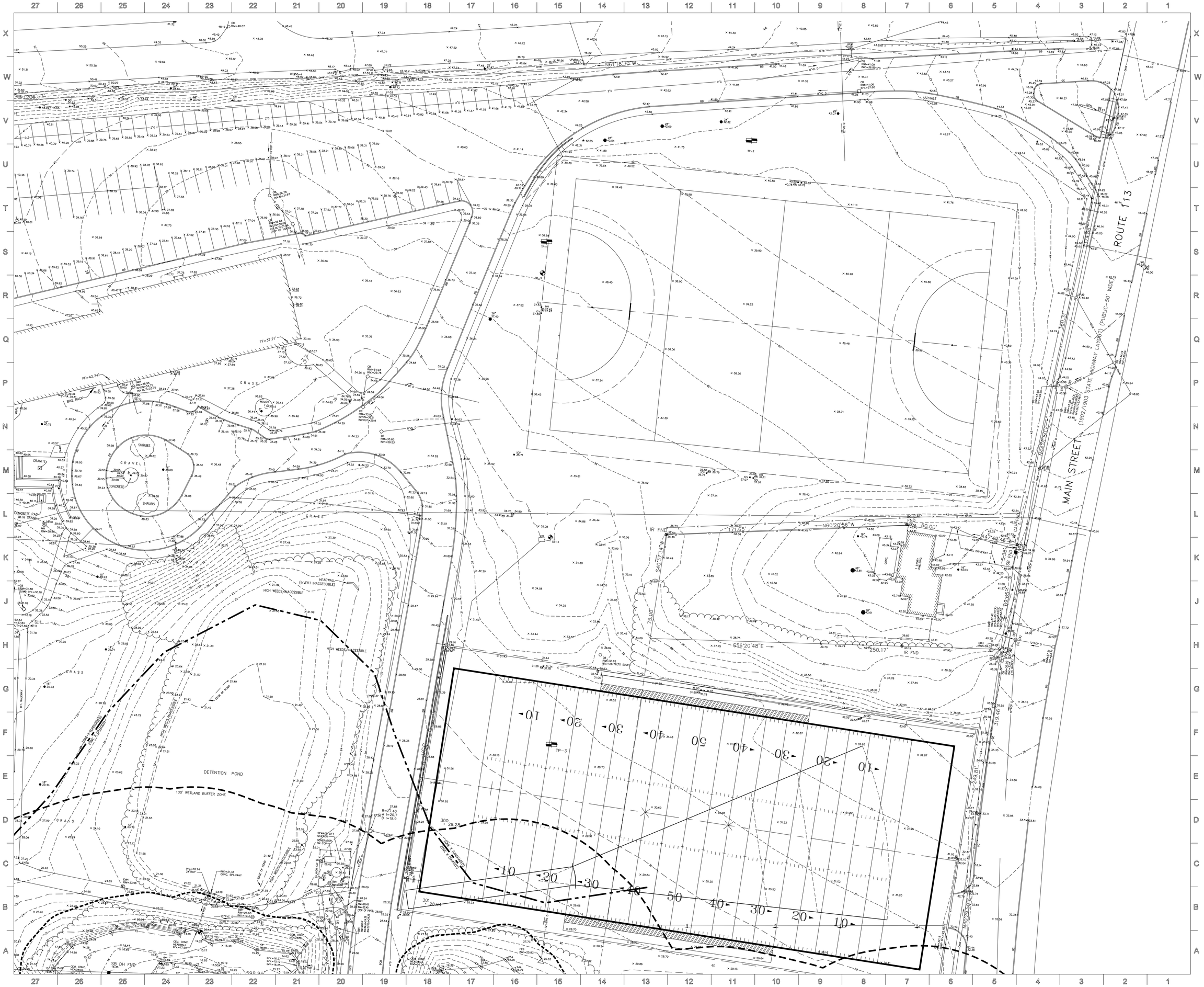

DORE + WHITTIER

DORE + WHITTIER ARCHITECTS, INC.

MASSACHUSETTS
250 MERRIMAC ST, BUILDING 7, 2ND FLOOR
NEWBURYPORT, MA 01950
P: 978-499-2999

VERMONT
212 BATTERY STREET
BURLINGTON, VT 05401
P: 802.863.1428

SURVEY PREPARED BY:

MERRIMACK ENGINEERING SERVICES
66 PARK STREET
ANDOVER, MASSACHUSETTS 01810
PHONE: (978) 475-3555 FAX: (978) 475-1448
EMAIL: MERRENG@AOL.COM

PENTUCKET REGIONAL SCHOOL DISTRICT BUILDING PROJECT

24 MAIN ST.
WEST NEWBURY, MA 01985

PROJECT NUMBER: 17-0762

SEAL AND SIGNATURE:

COMMONWEALTH OF MASSACHUSETTS
STEPHEN E. STAPINSKI
#29876
12/19/19

Date: 12/19/19

REVISIONS:

NO.	DATE	TITLE

ISSUE TITLE AND DATE:

Survey issued 2/4/20
Original survey issued 12/19/19

KEY PLAN

SHT. 2

ORIENTATION AND SCALE:

N

PROJECT NORTH

0 10' 20' 40'
SCALE: 1"=20' GRAPHIC SCALE

SHEET TITLE:

EXISTING CONDITIONS PLAN

SHEET NUMBER:

EX0.02

12/11/2019 2:22:22 PM

DORE + WHITTIER

DORE + WHITTIER ARCHITECTS, INC.

MASSACUSETTS
260 MERRIMAC ST. BUILDING 7, 2ND FLOOR
NEWBURYPORT, MA 01950
P: 978-499-2999

VERMONT
212 BATTERY STREET
BURLINGTON, VT 05401
P: 802.863.1428

SURVEY PREPARED BY:

MERRIMACK ENGINEERING SERVICES
66 PARK STREET
ANDOVER, MASSACHUSETTS 01810
PHONE: (978) 475-3555 FAX: (978) 475-1448
EMAIL: MERRENG@AOL.COM

PENTUCKET REGIONAL SCHOOL DISTRICT BUILDING PROJECT

24 MAIN ST.
WEST NEWBURY, MA 01985

PROJECT NUMBER: 17-0762

SEAL AND SIGNATURE:

MASSACHUSETTS STEPHEN E. STAPINSKI #29876 REGISTERED PROFESSIONAL ENGINEER

Date: 12/19/19

REVISIONS:

NO.	DATE	TITLE

ISSUE TITLE AND DATE:

Survey issued 2/4/20
Original survey issued 12/19/19

KEY PLAN

SHT. 3

ORIENTATION AND SCALE:

N

PROJECT NORTH

0 10' 20' 40'
SCALE: 1"=20' GRAPHIC SCALE

SHEET TITLE:

EXISTING CONDITIONS PLAN

SHEET NUMBER:

EX0.03

12/11/2019 2:22:23 PM

GENERAL NOTES:

1. TOPOGRAPHIC DATA, PROPERTY LINE INFORMATION, AND EXISTING SITE FEATURES WERE OBTAINED FROM A PLAN ENTITLED "EXISTING CONDITIONS SURVEY", PREPARED BY MERRIMACK ENGINEERING, DATED DECEMBER 2019.
2. FLOODPLAIN INFORMATION WAS OBTAINED FROM THE FLOOD INSURANCE RATE MAP (FIRM) NO. 25009C0092F. THE SITE IS IN ZONE X.
3. THE CONTRACTOR SHALL COMPLY WITH MASSACHUSETTS GENERAL LAWS CHAPTER 82, SECTION 40, AS AMENDED, WHICH STATES THAT NO ONE MAY EXCAVATE IN THE COMMONWEALTH OF MASSACHUSETTS EXCEPT IN AN EMERGENCY WITHOUT 72 HOURS NOTICE, EXCLUSIVE OF SATURDAYS, SUNDAYS, AND LEGAL HOLIDAYS, TO NATURAL GAS PIPELINE COMPANIES, AND MUNICIPAL UTILITY DEPARTMENTS THAT SUPPLY GAS, ELECTRICITY, TELEPHONE, OR CABLE TELEVISION SERVICE IN OR TO THE CITY OR TOWN WHERE THE EXCAVATION IS TO BE MADE. THE CONTRACTOR SHALL CALL "DIG SAFE" AT 1-888-DIG-SAFE.
4. THE CONTRACTOR SHALL COMPLY WITH MASSACHUSETTS GENERAL LAWS CHAPTER 82A, ALSO REFERRED TO AS JACKIE'S LAW, AS DETAILED IN SECTION 520 CMR 14.00 OF THE CODE OF MASSACHUSETTS REGULATIONS.
5. THE CONTRACTOR SHALL COMPLY WITH ALL APPLICABLE FEDERAL, STATE, AND LOCAL LAWS, RULES, REGULATIONS AND SAFETY CODES IN THE CONSTRUCTION OF ALL IMPROVEMENTS.
6. THE LOCATIONS AND ELEVATIONS OF ALL EXISTING UTILITIES ARE APPROXIMATE AND ALL UTILITIES MAY NOT BE SHOWN. PRESENCE AND LOCATIONS OF ALL UTILITIES WITHIN THE LIMIT OF WORK MUST BE DETERMINED BY THE CONTRACTOR PRIOR TO COMMENCEMENT OF CONSTRUCTION ACTIVITY. THE CONTRACTOR SHALL BE RESPONSIBLE FOR IDENTIFYING AND CONTACTING THE CONTROLLING AUTHORITIES AND/OR UTILITY COMPANIES RELATIVE TO THE LOCATIONS AND ELEVATIONS OF THEIR LINES. THE CONTRACTOR SHALL KEEP A RECORD OF ANY DISCREPANCIES OR CHANGES IN THE LOCATIONS OF ANY UTILITIES SHOWN OR ENCOUNTERED DURING CONSTRUCTION. ANY DISCREPANCIES SHALL BE REPORTED TO THE OWNER AND NITSCH ENGINEERING. ANY DAMAGE RESULTING FROM THE FAILURE OF THE CONTRACTOR TO MAKE THESE DETERMINATIONS AND CONTACTS SHALL BE BORNE BY THE CONTRACTOR.
7. THE CONTRACTOR SHALL, THROUGHOUT CONSTRUCTION, TAKE ADEQUATE PRECAUTIONS TO PROTECT ALL WALKS, GRADING, SIDEWALKS AND SITE DETAILS OUTSIDE OF THE LIMIT OF WORK AS DEFINED ON THE DRAWINGS AND SHALL REPAIR AND REPLACE OR OTHERWISE MAKE GOOD AS DIRECTED BY THE ENGINEER OR OWNER'S DESIGNATED REPRESENTATIVE ANY SUCH OR OTHER DAMAGE SO CAUSED.
8. THE CONTRACTOR SHALL BE SOLELY RESPONSIBLE FOR JOB SITE SAFETY AND ALL CONSTRUCTION MEANS AND METHODS.
9. PRIOR TO BEGINNING CONSTRUCTION, THE CONTRACTOR SHALL BECOME FAMILIAR WITH THE SITE AND CONSTRUCTION DOCUMENTS TO DEVELOP A THOROUGH UNDERSTANDING OF THE PROJECT, INCLUDING ANY SPECIAL CONDITIONS AND CONSTRAINTS.
10. IT IS THE CONTRACTOR'S RESPONSIBILITY TO BECOME FAMILIAR WITH THE PROJECT SITE AND TO VERIFY ALL CONDITIONS IN THE FIELD AND REPORT DISCREPANCIES BETWEEN PLANS AND ACTUAL CONDITIONS TO THE OWNER OR OWNER'S REPRESENTATION IMMEDIATELY.
11. THE CONTRACTOR SHALL CONDUCT ALL NECESSARY CONSTRUCTION NOTIFICATIONS AND APPLY FOR AND OBTAIN ALL NECESSARY CONSTRUCTION PERMITS.
12. THE CONTRACTOR IS SOLELY RESPONSIBLE FOR THE ESTABLISHMENT AND USE OF ALL VERTICAL AND HORIZONTAL CONSTRUCTION CONTROLS.
13. ELEVATIONS REFER TO NAVD88.
14. FOR SOIL INFORMATION REFER TO GEOTECHNICAL REPORT.

EROSION AND SEDIMENT CONTROL NOTES:

1. ALL EROSION AND SEDIMENT CONTROL MEASURES SHALL BE CONSTRUCTED AND MAINTAINED IN ACCORDANCE WITH THE LATEST EDITION OF THE "MASSACHUSETTS EROSION AND SEDIMENT CONTROL GUIDELINES FOR URBAN AND SUBURBAN AREAS" PREPARED BY DEPARTMENT OF ENVIRONMENTAL PROTECTION, BUREAU OF RESOURCE PROTECTION, AND THE CURRENT NPDES GENERAL PERMIT FOR STORMWATER DISCHARGES FROM CONSTRUCTION ACTIVITIES.
2. MEANS OF EROSION AND SEDIMENT PROTECTION AS NOTED ON THE DRAWINGS INDICATE MINIMUM RECOMMENDED PROVISIONS. THE CONTRACTOR IS RESPONSIBLE FOR FINAL SELECTION AND PLACEMENT OF EROSION AND SEDIMENTATION CONTROLS BASED ON ACTUAL SITE CONDITIONS AND CONSTRUCTION CONDITIONS. ADDITIONAL MEANS OF PROTECTION SHALL BE PROVIDED BY THE CONTRACTOR AS REQUIRED FOR CONTINUED OR UNFORESEEN EROSION PROBLEMS, OR AS DIRECTED BY CONTROLLING MUNICIPAL AUTHORITIES, AT NO ADDITIONAL EXPENSE TO THE OWNER.
3. AN EROSION CONTROL BARRIER SHALL BE INSTALLED ALONG THE EDGE OF PROPOSED DEVELOPMENT AS INDICATED IN THE PLAN PRIOR TO COMMENCEMENT OF DEMOLITION OR CONSTRUCTION OPERATIONS.
4. SEDIMENT CONTROL MEASURES SHALL BE ADJUSTED TO MEET FIELD CONDITIONS AT THE TIME OF AND DURING ALL PHASES OF CONSTRUCTION AND BE CONSTRUCTED PRIOR TO AND IMMEDIATELY AFTER ANY GRADING OR DISTURBANCE OF EXISTING SURFACE MATERIAL ON THE SITE.
5. AFTER ANY SIGNIFICANT RAINFALL (GREATER THAN 0.25 INCHES OF RAINFALL WITHIN 24 HOURS), SEDIMENT CONTROL STRUCTURES SHALL BE INSPECTED FOR INTEGRITY. ANY DAMAGE SHALL BE CORRECTED IMMEDIATELY.
6. PERIODIC INSPECTION AND MAINTENANCE OF ALL SEDIMENT CONTROL STRUCTURES SHALL BE PROVIDED TO ENSURE THAT THE INTENDED PURPOSE IS ACCOMPLISHED. THE CONTRACTOR SHALL BE RESPONSIBLE FOR ALL SEDIMENT LEAVING THE LIMIT OF WORK. SEDIMENT CONTROL MEASURES SHALL BE IN WORKING CONDITION AT THE END OF EACH WORKING DAY.
7. THE CONTRACTOR SHALL BE RESPONSIBLE FOR PREVENTING SEDIMENT FROM ENTERING ANY STORM DRAINAGE SYSTEM AND FROM BEING CONVEYED TO ANY WETLAND RESOURCE AREA, PUBLIC WAYS, ABUTTING PROPERTY, OR OUTSIDE OF THE PROJECT LIMITS.
8. THE CONTRACTOR SHALL PROTECT ALL DRAINAGE SWALES AND GROUND SURFACES WITHIN THE LIMIT OF WORK FROM EROSIVE CONDITIONS. STRAW BALE, CRUSHED STONE OR EQUIVALENT CHECK DAMS ARE TO BE PROVIDED AT A MAXIMUM OF TWO HUNDRED (200) FOOT SPACING, OR LESS AS SITE-SPECIFIC CONDITIONS WARRANT, WITHIN ALL DRAINAGE SWALES AND DITCHES AND AT UPSTREAM SIDES OF ALL DRAINAGE INLETS.
9. ALL STOCK PILES SHALL BE PROTECTED AND LOCATED A MINIMUM OF 100' FROM EXISTING WETLAND RESOURCE AREAS & WITHIN THE LIMIT OF WORK.
10. ANY SEDIMENT TRACKED ONTO PAVED AREAS SHALL BE SWEPT AT THE END OF EACH WORKING DAY.
11. ALL SEDIMENT RETAINED BY EROSION AND SEDIMENT CONTROL MEASURES SHALL BE LEGALLY DISPOSED OF OFFSITE.
12. TEMPORARY DIVERSION DITCHES, PERMANENT DITCHES, CHANNELS, EMBANKMENTS, AND ANY DENUDED SURFACE THAT WILL BE EXPOSED FOR A PERIOD OF 14 CALENDAR DAYS OR MORE SHALL BE CONSIDERED CRITICAL VEGETATION AREAS. THESE AREAS SHALL BE STABILIZED/PROTECTED WITH APPROPRIATE EROSION CONTROL MATTING OR OTHER EROSION CONTROL METHODS.
13. DUST SHALL BE CONTROLLED BY WATERING OR OTHER APPROVED METHODS AS DIRECTED BY THE PERMITTING AUTHORITY OR OWNER.
14. THE CONTRACTOR SHALL USE TEMPORARY SEEDING, MULCHING, OR OTHER APPROVED STABILIZATION MEASURES TO PROTECT EXPOSED AREAS DURING PROLONGED CONSTRUCTION OR OTHER LAND DISTURBANCE. STOCKPILES THAT WILL BE EXPOSED FOR LONGER THAN 14 DAYS SHALL BE STABILIZED.
15. THE CONTRACTOR IS RESPONSIBLE FOR REMOVAL OF ALL EROSION AND SEDIMENT CONTROLS AT THE COMPLETION OF SITE CONSTRUCTION, BUT ONLY WHEN DIRECTED BY THE TOWNS OF WEST NEWBURY AND GROVELAND'S CONSERVATION AGENTS. STABILIZE OR SEED BARE AREAS LEFT AFTER EROSION CONTROL REMOVAL.

UTILITY NOTES:

1. ALL UTILITY CONNECTIONS ARE SUBJECT TO THE APPROVAL OF, AND GRANTING OF PERMITS BY, THE LOCAL MUNICIPALITY IT SHALL BE THE SOLE RESPONSIBILITY OF THE CONTRACTOR TO OBTAIN ALL PERMITS AND APPROVALS RELATED TO UTILITY WORK PRIOR TO COMMENCEMENT OF CONSTRUCTION.
2. THE CONTRACTOR SHALL BE SOLELY RESPONSIBLE FOR OBTAINING ALL PERMISSIONS FOR, AND FOR CONDUCTING ALL PREPARATIONS RELATED TO, WORK AFFECTING ANY UTILITIES WITHIN THE JURISDICTION OF ANY NON-MUNICIPAL UTILITY COMPANY, INCLUDING BUT NOT LIMITED TO ELECTRIC, TELEPHONE, AND/OR GAS. THE CONTRACTOR SHALL NOTIFY ALL APPROPRIATE AGENCIES, DEPARTMENTS, AND UTILITY COMPANIES, IN WRITING, AT LEAST 7 DAYS (OR PER UTILITY COMPANY REQUIREMENT) AND NOT MORE THAN 30 DAYS PRIOR TO ANY CONSTRUCTION.
3. THE CONTRACTOR SHALL MAINTAIN UTILITIES SERVICING BUILDINGS AND FACILITIES WITHIN OR OUTSIDE THE PROJECT LIMIT UNLESS THE INTERRUPTION OF SERVICE IS COORDINATED WITH THE OWNER.
4. ALL WATER, SEWER, AND DRAIN WORK SHALL BE PERFORMED ACCORDING TO THE REQUIREMENTS AND STANDARD SPECIFICATIONS OF THE LOCAL MUNICIPALITY.
5. GAS, TELECOMMUNICATIONS AND ELECTRIC SERVICES ARE TO BE DESIGNED BY EACH UTILITY COMPANY IN COORDINATION WITH THE MECHANICAL, ELECTRIC, AND PLUMBING CONSULTANTS.
6. THE CONTRACTOR SHALL COORDINATE CONSTRUCTION ACTIVITIES OF NEW UTILITIES WITH GAS, TELECOMMUNICATION AND ELECTRICAL SERVICES.
7. INSTALL WATER LINES WITH A MINIMUM OF FIVE FEET OF COVER AND A MAXIMUM OF SEVEN FEET COVER FROM THE FINAL DESIGN GRADES.
8. MAINTAIN 10 FEET HORIZONTAL SEPARATION AND 18 INCHES VERTICAL SEPARATION (WATER OVER SEWER) BETWEEN SEWER AND WATER LINES. WHEREVER THERE IS LESS THAN 10 FEET OF HORIZONTAL SEPARATION AND 18 INCHES OF VERTICAL SEPARATION BETWEEN A PROPOSED OR EXISTING SEWER LINE TO REMAIN AND A PROPOSED OR EXISTING WATER LINE TO REMAIN BOTH WATER MAIN AND SEWER MAIN SHALL BE CONSTRUCTED OF MECHANICAL JOINT CEMENT LINED DUCTILE IRON PIPE FOR A DISTANCE OF 10-FEET ON EITHER SIDE OF THE CROSSING. ONE (1) FULL LENGTH OF WATER PIPE SHALL BE CENTERED OVER THE SEWER AT THE CROSSING.
9. THE CONTRACTOR SHALL MAINTAIN ALL EXISTING UTILITIES EXCEPT THOSE NOTED TO BE ABANDONED AND/OR REMOVED & DISPOSED.
10. THE GENERAL CONTRACTOR IS RESPONSIBLE FOR TRENCHING, BACKFILLING, AND SURFACE RESTORATION FOR GAS UTILITY SYSTEMS.
11. ALL ONSITE UTILITIES SHALL BE INSTALLED UNDERGROUND UNLESS OTHERWISE NOTED.
12. ALL EXISTING AND PROPOSED MANHOLE FRAMES, COVERS, VALVES, CLEANOUTS, CASTINGS, ETC. SHALL BE RAISED TO FINISHED GRADE PRIOR TO FINAL GRADING AND PAVING CONSTRUCTION.
13. ALL GRATES IN WALKWAYS SHALL BE ADA COMPLIANT.

DEMOLITION NOTES:

1. SITE PREPARATION AND DEMOLITION SHALL INCLUDE THOSE AREAS WITHIN THE LIMIT OF WORK LINE AS SHOWN ON THE CONTRACT DOCUMENTS.
2. ANY AREA OUTSIDE THE LIMIT OF WORK THAT IS DISTURBED SHALL BE RESTORED TO ITS ORIGINAL CONDITION AT NO ADDITIONAL COST TO THE OWNER.
3. CONSULT ALL OF THE DRAWINGS AND SPECIFICATIONS FOR COORDINATION REQUIREMENTS BEFORE COMMENCING DEMOLITION.
4. THE CONTRACTOR SHALL COORDINATE SITE DEMOLITION EFFORTS WITH ALL TRADES THAT MAY BE AFFECTED BY THE WORK.
5. ALL ITEMS REQUIRING REMOVAL SHALL BE REMOVED TO FULL DEPTH TO INCLUDE BASE MATERIAL AND FOOTINGS OR FOUNDATIONS AS REQUIRED TO FACILITATE CONSTRUCTION, AND LEGALLY DISPOSED OF OFFSITE BY CONTRACTOR.
6. UTILITY PIPES DESIGNATED TO BE ABANDONED IN PLACE SHALL BE PLUGGED AT THEIR ENDS WITH WATERTIGHT BRICK MASONRY OR CEMENT MORTAR WITH A MINIMUM THICKNESS OF 8 INCHES.
7. UTILITY PIPES DESIGNATED TO BE REMOVED SHALL CONSIST OF THE COMPLETE REMOVAL AND DISPOSAL OF THE ENTIRE LENGTH OF PIPE AND BACKFILL AND 95% COMPACTION OF THE VOID WITH ORDINARY BORROW. WHEN THE VOID IS WITHIN THE FOOTPRINT OF THE NEW BUILDING, GRAVEL BORROW SHALL BE USED TO BACKFILL THE VOID.
8. UTILITY STRUCTURES DESIGNATED TO BE ABANDONED IN PLACE SHALL HAVE THEIR CAST IRON CASTINGS REMOVED AND DISPOSED, INLET AND OUTLET PIPES PLUGGED, THE BOTTOM OF THE STRUCTURES SHALL BE BROKEN, THE VOID OF THE STRUCTURES SHALL BE BACKFILLED AND COMPACTED TO 95% WITH ORDINARY BORROW OR FLOWABLE FILL, AND THE TOP OF THE STRUCTURE SHALL BE REMOVED SO THAT IT IS AT LEAST 36 INCHES BELOW FINISH GRADE.
9. UTILITY STRUCTURES DESIGNATED TO BE REMOVED SHALL CONSIST OF THE REMOVAL AND DISPOSAL OF CAST IRON CASTINGS, PLUGGING OF INLET AND OUTLET PIPES, REMOVAL OF THE STRUCTURE, AND BACKFILL AND 95% COMPACTION OF THE VOID WITH ORDINARY BORROW. WHEN HE VOID IS WITHIN THE FOOTPRINT OF THE NEW BUILDING, GRAVEL BORROW SHALL BE USED TO BACKFILL THE VOID.
10. ALL DEBRIS GENERATED DURING SITE PREPARATION ACTIVITIES SHALL BE LEGALLY DISPOSED OF OFFSITE.
11. AT ALL LOCATIONS WHERE EXISTING CURBING, CONCRETE PAVEMENT OR BITUMINOUS CONCRETE ROADWAY ABUTS NEW CONSTRUCTION, THE EDGE OF THE EXISTING CURB OR PAVEMENT SHALL BE SAW CUT TO A CLEAN, SMOOTH EDGE.
12. EXTEND DESIGNATED LIMIT OF WORK AS NECESSARY TO ACCOMPLISH ROUGH GRADING, EROSION CONTROL, TREE PROTECTION, AND SITE WORK AS REQUIRED BY THESE DRAWINGS AND SPECIFICATIONS.
13. THE CONTRACTOR SHALL REMOVE FROM THE SITE ALL RUBBISH AND DEBRIS FOUND THEREON. STORAGE OF SUCH MATERIALS ON THE PROJECT SITE WILL NOT BE PERMITTED. THE CONTRACTOR SHALL LEAVE THE SITE IN SAFE, CLEAN, AND LEVEL CONDITION UPON COMPLETION OF THE SITE DEMOLITION WORK.
14. REMOVE AND STOCKPILE ALL EXISTING SITE LIGHTS, BENCHES, TRASH RECEPTACLES, TRAFFIC SIGNS, GRANITE CURB, AND OTHER SITE IMPROVEMENTS WITHIN LIMIT OF WORK LINE UNLESS OTHERWISE NOTED.
15. ALL EXISTING TREES AND SHRUBS TO REMAIN SHALL BE PROTECTED AND MAINTAINED THROUGHOUT THE TIME OF CONSTRUCTION, AS SPECIFIED AND DIRECTED BY THE LANDSCAPE ARCHITECT.
16. BEFORE ANY TREES OR SHRUBS ARE REMOVED, THE CONTRACTOR SHALL ARRANGE A CONFERENCE ON THE SITE WITH THE OWNER OR OWNER'S REPRESENTATIVE TO IDENTIFY TREES AND SHRUBS THAT ARE TO BE REMOVED, AS WELL AS THOSE WHICH ARE TO BE PROTECTED. DO NOT COMMENCE CLEARING OPERATIONS WITHOUT A CLEAR UNDERSTANDING OF EXISTING CONDITIONS TO BE PRESERVED.
17. THE CONTRACTOR SHALL REMOVE FROM THE AREA OF CONSTRUCTION PAVEMENT, CONCRETE, CURBING, POLES AND FOUNDATIONS, ISLANDS, TREE BERMS AND OTHER FEATURES WITHIN THE LIMITS OF CONSTRUCTION AS REQUIRED TO ACCOMMODATE NEW CONSTRUCTION WHETHER SPECIFIED ON THE DRAWINGS OR NOT.

PROPOSED LEGEND

	LIMIT OF WORK
	EXISTING UTILITY TO BE ABANDONED, REMOVED AND DISPOSED IF IN CONFLICT WITH NEW SITE IMPROVEMENTS, OR AS INDICATED ON DRAWINGS
	EROSION CONTROL BARRIER
— x — x —	CONSTRUCTION FENCE
—W—	DOMESTIC WATER PIPE
—FP—	FIRE PROTECTION PIPE
—S—	SANITARY SEWER PIPE
—D—	STORM DRAIN PIPE
—G—	GAS PIPE
—E—	ELECTRIC DUCTBANK
—T/C—	TELECOM DUCTBANK
—X—	FUTURE UTILITY, SHOWN FOR INFORMATION ONLY
	INLET PROTECTION
	ELEVATION CONTOURS
	MATCH LINE
CO●	CLEANOUT
AD● ■AD	AREA DRAIN
DMH	DRAIN MANHOLE
WQS	WATER QUALITY STRUCTURE
CB	CATCH BASIN
DCB	DOUBLE CATCH BASIN
WQI	WATER QUALITY INLET
SMH	SEWER MANHOLE
TMH	TELECOM MANHOLE
EMH	ELECTRIC MANHOLE
WV	WATER VALVE
HYD	FIRE HYDRANT

ABBREVIATIONS

AD	AREA DRAIN
BC	BOTTOM OF CURB ELEVATION
CB	CATCH BASIN
CCB	CAPE COD BERM
CI	CAST IRON
CJ	CONTROL JOINT
CL	CENTER LINE
CO	CLEANOUT
COP	CENTER OF PIPE
CPP	CORRUGATED POLYETHYLENE PIPE
DCB	DOUBLE CATCH BASIN
DI	DUCTILE IRON PIPE CEMENT LINED
DMH	DRAIN MANHOLE
EHH	ELECTRIC HANDHOLE
EJ	EXPANSION JOINT
EMH	ELECTRIC MANHOLE
FD	FOUNDATION DRAIN
FFE	FINISHED FLOOR ELEVATION
GG	GAS GATE
HP	HIGH POINT
HYD	FIRE HYDRANT
INV	INVERT ELEVATION
LF	LINEAR FEET
LOW	LIMIT OF WORK
LP	LOW POINT
LW	LAB WASTE
M&P	MAINTAIN AND PROTECT
NIC	NOT IN CONTRACT
OC	ON CENTER
OCS	OUTLET CONTROL STRUCTURE
PD	PERIMETER DRAIN
PERF	PERFORATED
PVC	POLYVINYL CHLORIDE PIPE
R&D	REMOVE AND DISPOSE
R&S	REMOVE AND STOCKPILE
RD	ROOF DRAIN
RIM	RIM ELEVATION
SMH	SEWER MANHOLE
SS	SEWER SERVICE
TC	TOP OF CURB ELEVATION
THH	TELECOM HANDHOLE
TMH	TELECOM MANHOLE
TOP	TOP OF PIPE
TOD	TOP OF DUCT BANK
TYP	TYPICAL
UD	UNDERDRAIN
USD	UNDERSLAB DRAIN
VGC	VERTICAL GRANITE CURB
VIF	VERIFY IN FIELD
WQI	WATER QUALITY INLET
WQS	WATER QUALITY STRUCTURE
WV	WATER VALVE

DORE + WHITTIER
MASSACHUSETTS
260 MERRIMAC ST. BUILDING 7, 2ND FLOOR
NEWBURYPORT, MA 01950
P: 978-499-2999
VERMONT
212 BATTERY STREET
BURLINGTON, VT 05401
P: 802.863.1432
WWW.DOREANDWHITTIER.COM

Nitsch Engineering
www.nitschengineering.com
2 Center Plaza, Suite 430
Boston, MA 02108
T: (617) 338-0063
F: (617) 338-6472
- Civil Engineering
- Land Surveying
- Transportation Engineering
- Structural Engineering
- Green Infrastructure
- Planning
- GIS

PROJECT NUMBER:

SEAL AND SIGNATURE:

REVISIONS:

NO.	DATE	TITLE

PENTUCKET REGIONAL SCHOOL DISTRICT BUILDING PROJECT

24 MAIN STREET
WEST NEWBURY, MA 01985

ISSUE TITLE AND DATE:

PLANNING BOARD
APPLICATION - REVISED
01/31/2020

SHEET TITLE:
CIVIL NOTES, ABBREVIATIONS, AND LEGEND

SHEET NUMBER:
C0.01

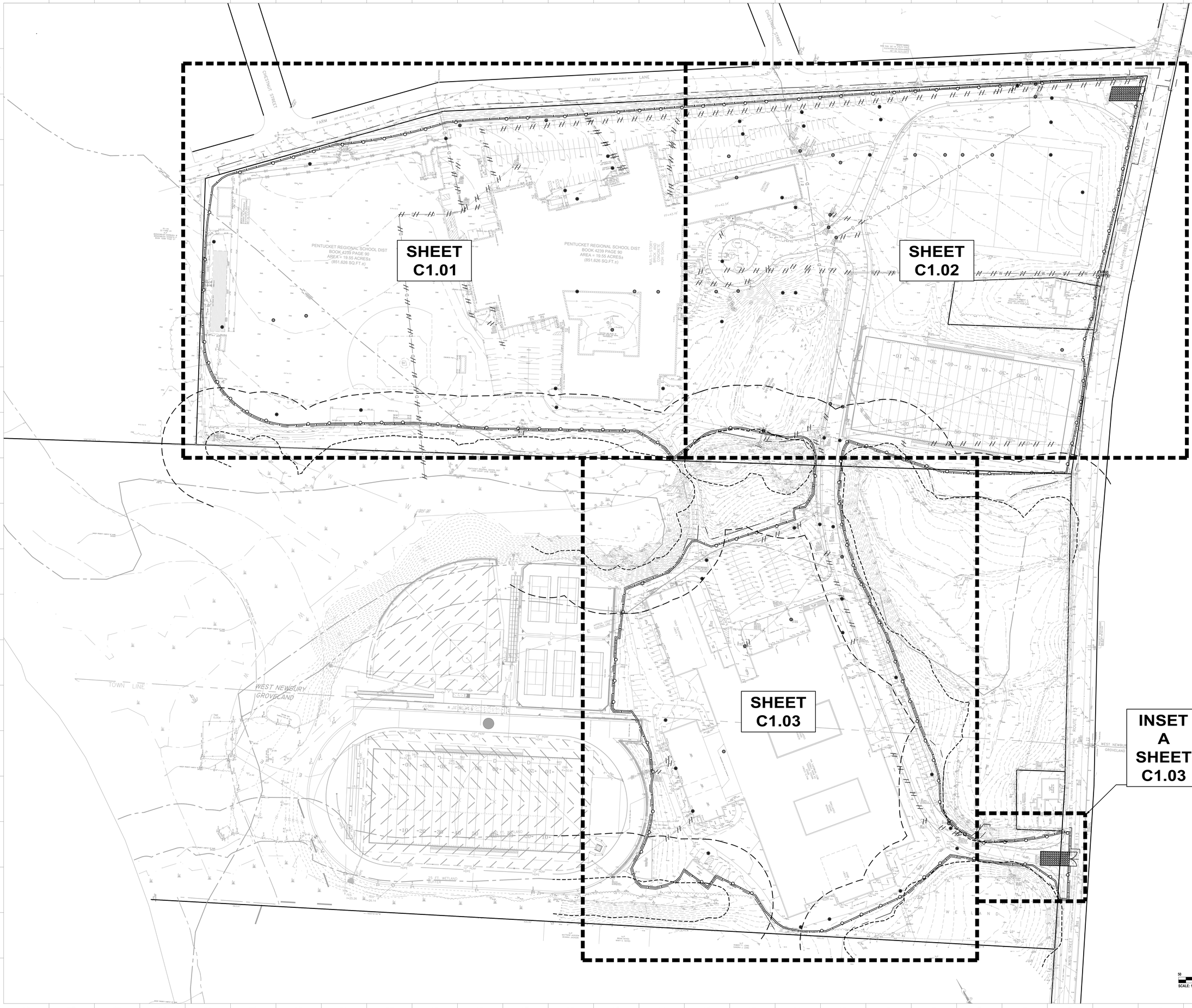

DORE + WHITTIER
MASSACHUSETTS
260 MERRIMAC ST. BUILDING 7, 2ND FLOOR
NEWBURYPORT, MA. 01950
P: 978-499-2999
VERMONT
212 BATTERY STREET
BURLINGTON, VT 05401
P: 802.862.1420
WWW.DOREANDWHITTIER.COM

Nitsch Engineering
www.nitschengr.com
2 Center Plaza, Suite 430
Boston, MA 02108
T: (617) 338-0063
F: (617) 338-6472

- Civil Engineering
- Land Surveying
- Transportation Engineering
- Structural Engineering
- Smart Infrastructure
- Planning
- GIS

PROJECT NUMBER:

SEAL AND SIGNATURE:

REVISIONS:

NO.	DATE	TITLE

PENTUCKET REGIONAL SCHOOL DISTRICT BUILDING PROJECT

24 MAIN STREET
WEST NEWBURY, MA 01985

ISSUE TITLE AND DATE:

PLANNING BOARD
APPLICATION - REVISED
01/31/2020

SHEET TITLE:

UTILITY
DEMOLITION AND
EROSION CONTROL
KEY PLAN

SHEET NUMBER:

C1.00

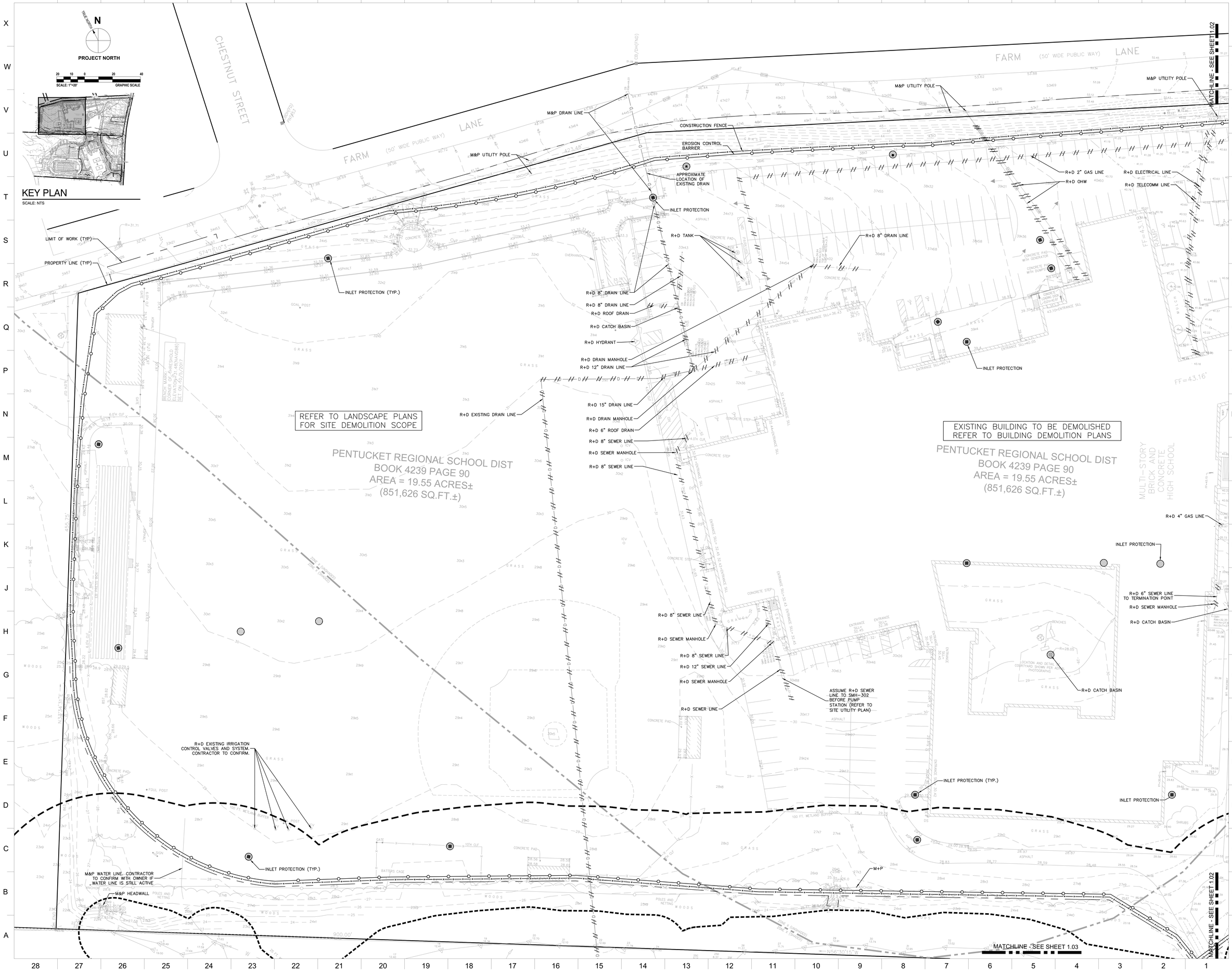

DORE + WHITTIER
MASSACHUSETTS
260 MERRIMAC ST, BUILDING 7, 2ND FLOOR
NEWBURYPORT, MA 01950
P: 978-499-2999
VERMONT
212 BATTERY STREET
BURLINGTON, VT 05401
P: 802.863.1426
WWW.DOREANDWHITTIER.COM

Nitsch Engineering
www.nitschengineering.com
2 Center Plaza, Suite 430
Boston, MA 02108
T: (617) 338-0063
F: (617) 338-6472
- Civil Engineering
- Land Surveying
- Transportation Engineering
- Structural Engineering
- Green Infrastructure
- Planning
- GIS

PROJECT NUMBER:

SEAL AND SIGNATURE:

REVISIONS:

NO.	DATE	TITLE

PENTUCKET REGIONAL SCHOOL DISTRICT BUILDING PROJECT

24 MAIN STREET
WEST NEWBURY, MA 01985

ISSUE TITLE AND DATE:

PLANNING BOARD APPLICATION - REVISED 01/31/2020

SHEET TITLE:

SITE UTILITY DEMOLITION AND EROSION CONTROL PLAN

SHEET NUMBER:

C1.01

DORE + WHITTIER
MASSACHUSETTS
260 MERRIMAC ST. BUILDING 7, 2ND FLOOR
NEWBURYPORT, MA 01950
P: 978-499-2999
VERMONT
212 BATTERY STREET
BURLINGTON, VT 05401
P: 802-862-1420
WWW.DOREANDWHITTIER.COM

Nitsch Engineering
www.nitschengineering.com
2 Center Plaza, Suite 430
Boston, MA 02108
T: (617) 338-0063
F: (617) 338-6472
- Civil Engineering
- Land Surveying
- Transportation Engineering
- Structural Engineering
- Water Infrastructure
- Permitting
- GIS

PROJECT NUMBER:

SEAL AND SIGNATURE:

REVISIONS:

NO.	DATE	TITLE

PENTUCKET REGIONAL SCHOOL DISTRICT BUILDING PROJECT

24 MAIN STREET
WEST NEWBURY, MA 01985

ISSUE TITLE AND DATE:

PLANNING BOARD APPLICATION - REVISED
01/31/2020

TITLE NORTH
N
PROJECT NORTH

20 10 0 20 40
SCALE: 1"=20' GRAPHIC SCALE

KEY PLAN
SCALE: NTS

SHEET TITLE:
SITE UTILITY DEMOLITION AND EROSION CONTROL PLAN

SHEET NUMBER:
C1.02

MATCHLINE - SEE SHEET 1.01

M&P 30" RCP
M&P 6" SEWER FORCE MAIN
M&P 8" SEWER LINE
M&P 8" WATER LINE
M&P HEADWALL
M&P HEADWALL
M&P UTILITY POLE
M&P UTILITY POLE
STABILIZED CONSTRUCTION ENTRANCE

INSET A
SCALE: 1"=20'

M&P 12" CONCRETE DRAIN LINE
M&P DRAIN MANHOLE
M&P 12" CONCRETE DRAIN LINE
PLUG MANHOLE
R+D DRAIN MANHOLE
R+D 6" DRAIN LINE
R+D 8" DRAIN LINE
INLET PROTECTION (TYP)
R+D 6" DRAIN LINE
R+D 12" DRAIN LINE
INLET PROTECTION (TYP.)

REFER TO LANDSCAPE PLANS FOR SITE DEMOLITION SCOPE

M&P 4" GAS LINE
M&P ELECTRICAL
M&P GAS LINE
M&P UC
M+P EXISTING HEADWALL
M+P
M+P WATER LINE
M+P DRAIN MANHOLE
M+P 12" DRAIN LINE
R+D CATCH BASIN
R+D 10" DRAIN LINE
M+P DRAIN MANHOLE
R+D 10" DRAIN LINE
INLET PROTECTION
M+P DRAIN MANHOLE
M+P 8" WATER LINE
M+P 15" DRAIN LINE
M+P DRAIN MANHOLE
R+D 10" DRAIN LINE
M+P 15" DRAIN LINE
R+D 10" DRAIN LINE
M+P EXISTING WATER LINE
M+P EXISTING HEADWALL

EXISTING BUILDING TO BE DEMOLISHED
REFER TO BUILDING DEMOLITION PLANS

INLET PROTECTION
INLET PROTECTION
INLET PROTECTION
R+D 10" DRAIN LINE
R+D DRAIN MANHOLE
M+P 18" DRAIN LINE
M+P DRAIN MANHOLE
M+P SEWER MANHOLE
R+D 10" DRAIN LINE
M+P SEWER MANHOLE
R+D CATCH BASIN
M+P WATER LINE
M+P SEWER MANHOLE
M+P SEWER LINE
M+P EXISTING HEADWALL
M+P FORCE MAIN
R+D DRAIN MANHOLE
M+P SEWER FORCE MAIN
INLET PROTECTION
M&P 8" WATER LINE
M&P 8" SEWER LINE
LIMIT OF WORK
R+D DRAIN MANHOLE
R+D 15" DRAIN LINE
R+D 12" DRAIN LINE
R+D DRAIN MANHOLE
R+D 15" DRAIN LINE
M+P SEWER MANHOLE
R+D CATCH BASIN

MATCHLINE - SEE INSET A

N
TRUE NORTH
PROJECT NORTH

SCALE: 1"=20'
20 10 0 20 40
GRAPHIC SCALE

KEY PLAN
SCALE: NTS

DORE + WHITTIER
MASSACHUSETTS
260 MERRIMAC ST. BUILDING 7, 2ND FLOOR
NEWBURYPORT, MA. 01950
P: 978-499-2990
VERMONT
212 BATTERY STREET
BURLINGTON, VT 05401
P: 802.863.1426
WWW.DOREANDWHITTIER.COM

Nitsch Engineering
www.nitschengr.com
2 Center Plaza, Suite 430
Boston, MA 02108
T: (617) 338-0063
F: (617) 338-6472
- Civil Engineering
- Land Surveying
- Transportation Engineering
- Structural Engineering
- Smart Infrastructure
- Planning
- GIS

NOTICE
THESE DOCUMENTS ARE COMPLETE AS AN ORIGINAL RECORD DOCUMENT, SIGNED AND SEALED BY THE PROFESSIONAL ENGINEER. THE COMPUTER FORMATTED DATA PROVIDED TO OTHERS IS FOR CONVENIENCE ONLY. THE ORIGINAL DOCUMENT STAMPED BY THE ENGINEER REPRESENTS THE ENGINEER'S WORK AND PROFESSIONAL OPINION.

PROJECT NUMBER:

SEAL AND SIGNATURE:

REVISIONS:

NO.	DATE	TITLE

PENTUCKET REGIONAL SCHOOL DISTRICT BUILDING PROJECT

24 MAIN STREET
WEST NEWBURY, MA 01985

ISSUE TITLE AND DATE:

PLANNING BOARD APPLICATION - REVISED 01/31/2020

SHEET TITLE:
SITE UTILITY DEMOLITION AND EROSION CONTROL PLAN

SHEET NUMBER:
C1.03

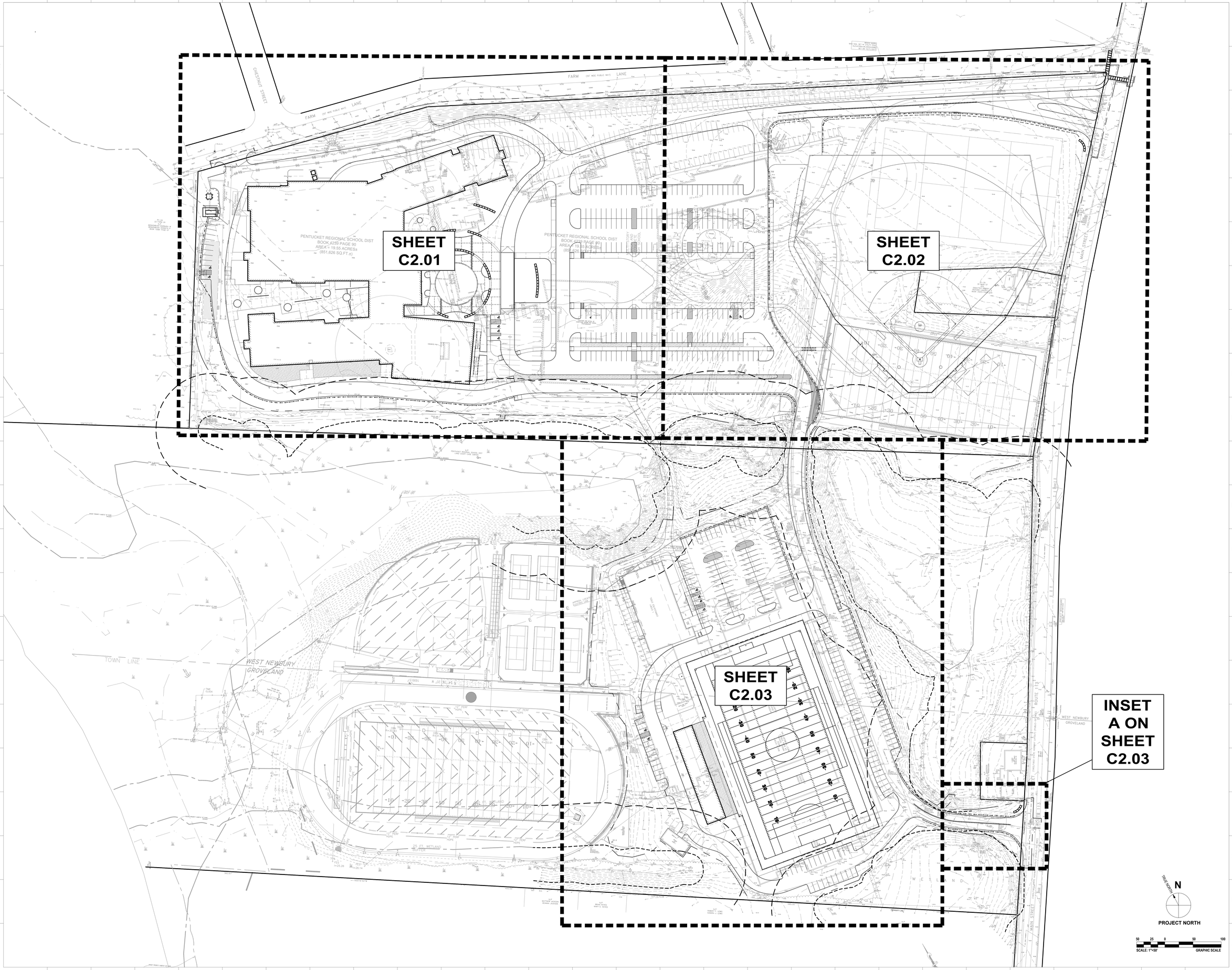

DORE + WHITTIER
MASSACHUSETTS
260 MERRIMAC ST. BUILDING 7, 2ND FLOOR
NEWBURYPORT, MA. 01950
P: 978-499-2999
VERMONT
212 BATTERY STREET
BURLINGTON, VT 05401
P: 802.862.1420
WWW.DOREANDWHITTIER.COM

Nitsch Engineering
www.nitschengr.com
2 Center Plaza, Suite 430
Boston, MA 02108
T: (617) 338-0063
F: (617) 338-6472

- Civil Engineering
- Land Surveying
- Transportation Engineering
- Structural Engineering
- Smart Infrastructure
- Planning
- GIS

NOTICE
THESE DOCUMENTS ARE COMPRISED OF THE PROFESSIONAL OPINIONS OF DORE + WHITTIER, BASED ON THE INFORMATION AVAILABLE AT THE TIME AND UNDER THE CIRCUMSTANCES AT THE TIME THEY WERE PREPARED. THE CONCLUSIONS AND RECOMMENDATIONS CONTAINED IN THESE DOCUMENTS MAY BE INFLUENCED BY FACTORS EXISTING OR OCCURRING AFTER THE DATE OF THEIR PREPARATION, WHICH WERE UNKNOWN OR UNFORESEEN AT THE TIME THEY WERE PREPARED. DORE + WHITTIER DISCLAIMS ANY RESPONSIBILITY FOR SUCH CHANGES.

PROJECT NUMBER:

SEAL AND SIGNATURE:

REVISIONS:

NO.	DATE	TITLE

PENTUCKET REGIONAL SCHOOL DISTRICT BUILDING PROJECT

24 MAIN STREET
WEST NEWBURY, MA 01985

ISSUE TITLE AND DATE:

PLANNING BOARD APPLICATION - REVISED 01/31/2020

SHEET TITLE:
Site Vehicular Layout and Materials Key Plan

SHEET NUMBER:
C2.00

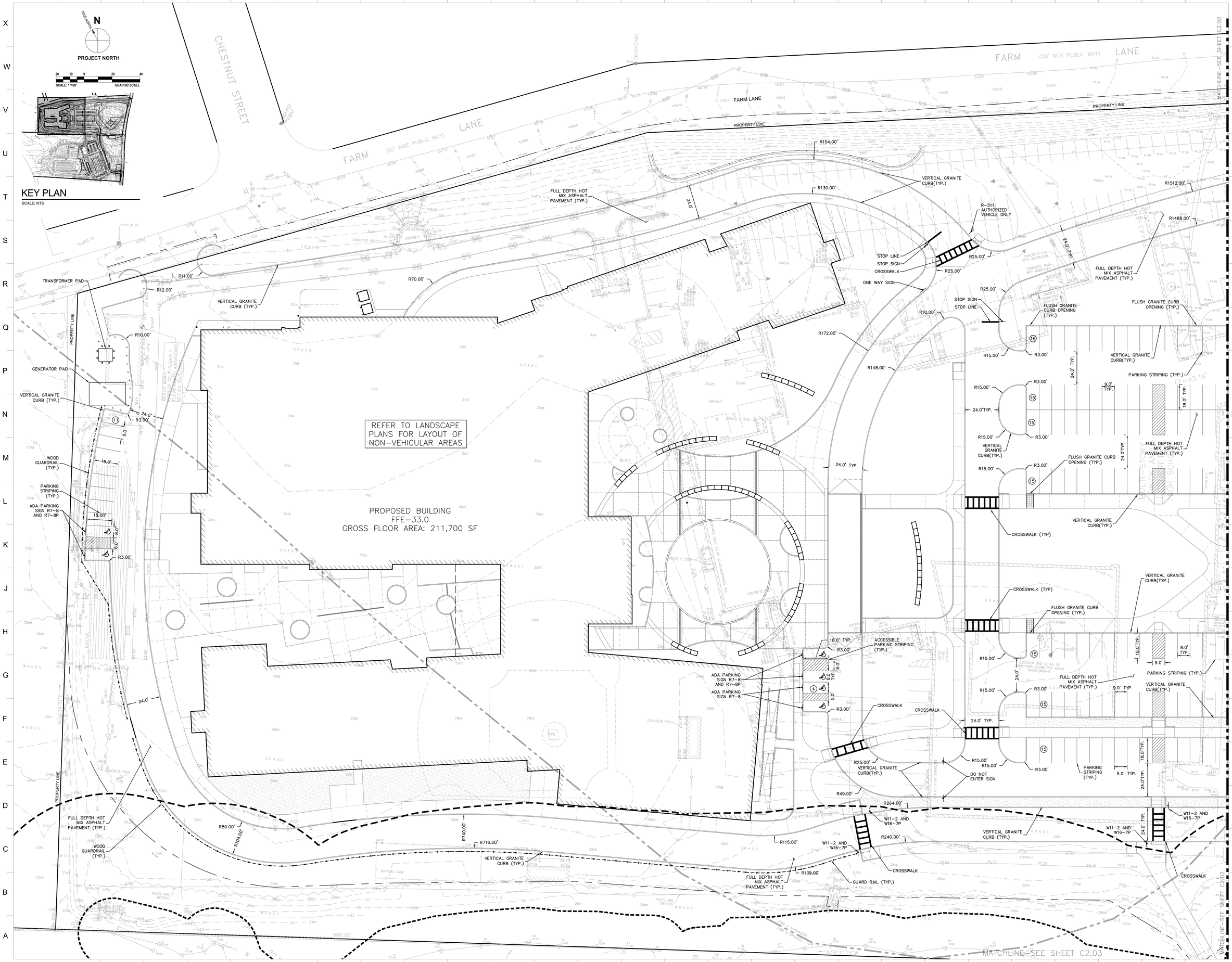

DORE + WHITTIER
MASSACHUSETTS
260 MERRIMAC ST, BUILDING 7, 2ND FLOOR
NEWBURYPORT, MA 01950
P: 978-499-2999
VERMONT
212 BATTERY STREET
BURLINGTON, VT 05401
P: 802.863.1426
WWW.DOREANDWHITTIER.COM

Nitsch Engineering
www.nitschengr.com
2 Center Plaza, Suite 430
Boston, MA 02108
T: (617) 338-0063
F: (617) 338-6472
- Civil Engineering
- Land Surveying
- Transportation Engineering
- Structural Engineering
- Smart Infrastructure
- Planning
- GIS

PROJECT NUMBER:

SEAL AND SIGNATURE:

REVISIONS:

NO.	DATE	TITLE

PENTUCKET REGIONAL SCHOOL DISTRICT BUILDING PROJECT

24 MAIN STREET
WEST NEWBURY, MA 01985

ISSUE TITLE AND DATE:

PLANNING BOARD APPLICATION - REVISED 01/31/2020

SHEET TITLE:

Site Vehicular Layout and Materials Plan

SHEET NUMBER:

C2.01

NOTE:
FOR LAYOUT AND MATERIALS OF NONVEHICULAR AREAS, REFER TO LANDSCAPE ARCHITECT'S PLANS.

TRUE NORTH
N
PROJECT NORTH

20 10 0 20 40
SCALE: 1"=20' GRAPHIC SCALE

KEY PLAN
SCALE: NTS

DORE + WHITTIER
MASSACHUSETTS
260 MERRIMAC ST. BUILDING 7, 2ND FLOOR
NEWBURYPORT, MA 01950
P: 978-499-2999
VERMONT
212 BATTERY STREET
BURLINGTON, VT 05401
P: 802-862-1420
WWW.DOREANDWHITTIER.COM

Nitsch Engineering
www.nitschengineering.com
2 Center Plaza, Suite 430
Boston, MA 02108
T: (617) 338-0063
F: (617) 338-6472
- Civil Engineering
- Land Surveying
- Transportation Engineering
- Structural Engineering
- Water Infrastructure
- Permitting
- GIS

PROJECT NUMBER:

SEAL AND SIGNATURE:

REVISIONS:

NO.	DATE	TITLE

PENTUCKET REGIONAL SCHOOL DISTRICT BUILDING PROJECT

24 MAIN STREET
WEST NEWBURY, MA 01985

ISSUE TITLE AND DATE:

PLANNING BOARD APPLICATION - REVISED 01/31/2020

SHEET TITLE:
Site Vehicular Layout and Material Plan

SHEET NUMBER:
C2.02

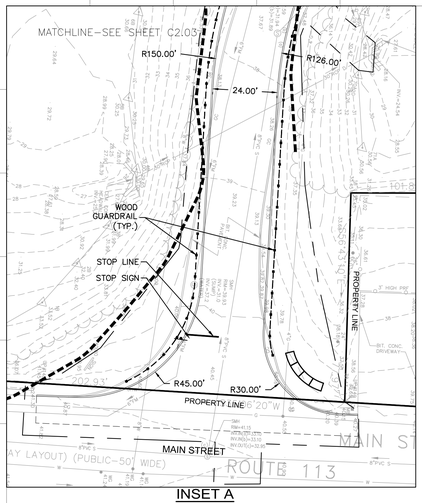

INSET A
SCALE: 1"=20'

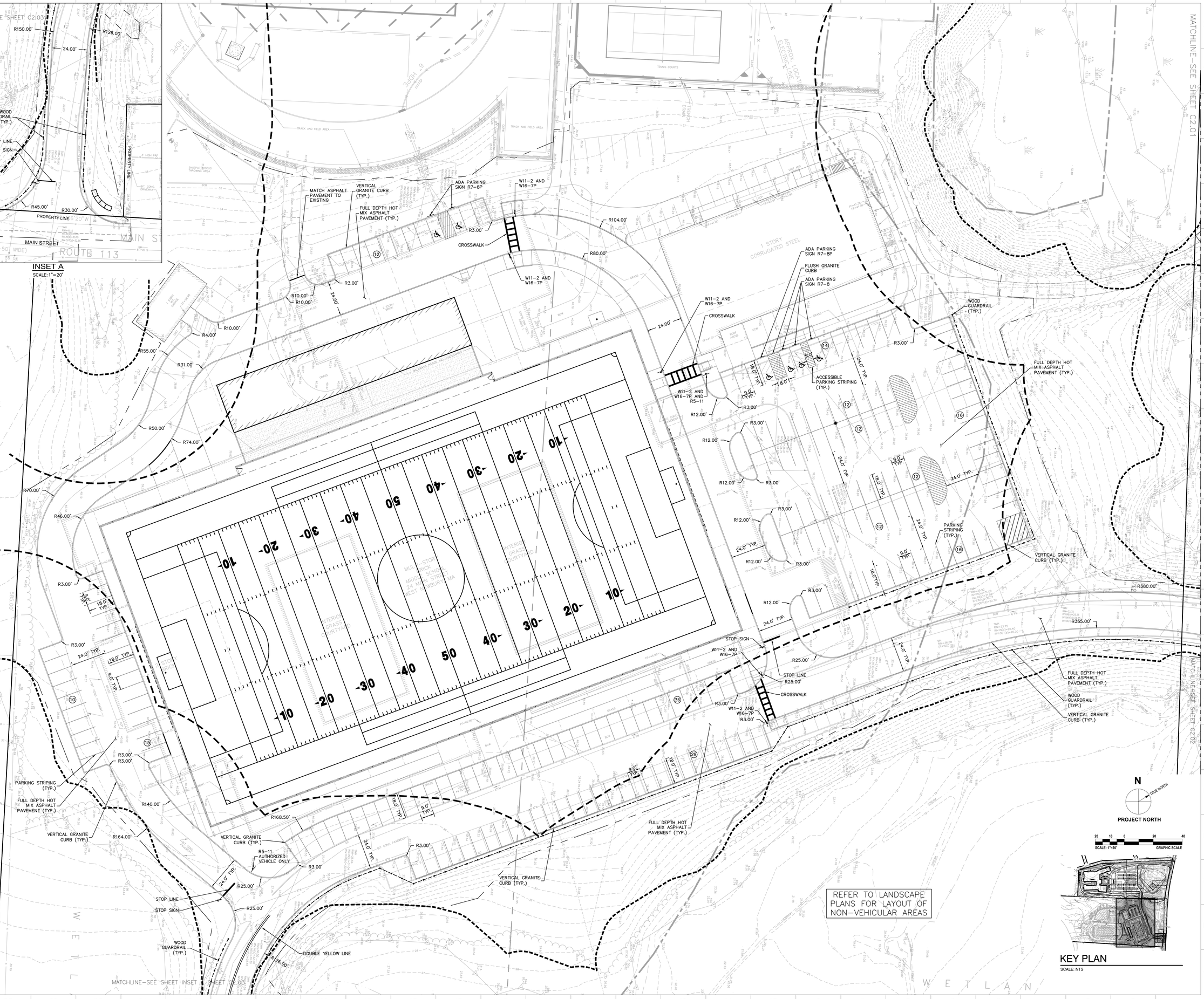

N
TRUE NORTH
PROJECT NORTH

SCALE: 1"=20' GRAPHIC SCALE

KEY PLAN
SCALE: NTS

DORE + WHITTIER
MASSACHUSETTS
260 MERRIMAC ST. BUILDING 7, 2ND FLOOR
NEWBURYPORT, MA. 01950
P: 978-499-2999
VERMONT
212 BATTERY STREET
BURLINGTON, VT 05401
P: 802.863.1426
WWW.DOREANDWHITTIER.COM

Nitsch Engineering
www.nitschengr.com
2 Center Plaza, Suite 430
Boston, MA 02108
T: (617) 338-0063
F: (617) 338-6472

- Civil Engineering
- Land Surveying
- Transportation Engineering
- Structural Engineering
- Green Infrastructure
- Planning
- GIS

PROJECT NUMBER:

SEAL AND SIGNATURE:

REVISIONS:

NO.	DATE	TITLE

PENTUCKET REGIONAL SCHOOL DISTRICT BUILDING PROJECT

24 MAIN STREET
WEST NEWBURY, MA 01985

ISSUE TITLE AND DATE:

PLANNING BOARD APPLICATION - REVISED 01/31/2020

SHEET TITLE:
Site Vehicular Layout and Materials Plan

SHEET NUMBER:
C2.03

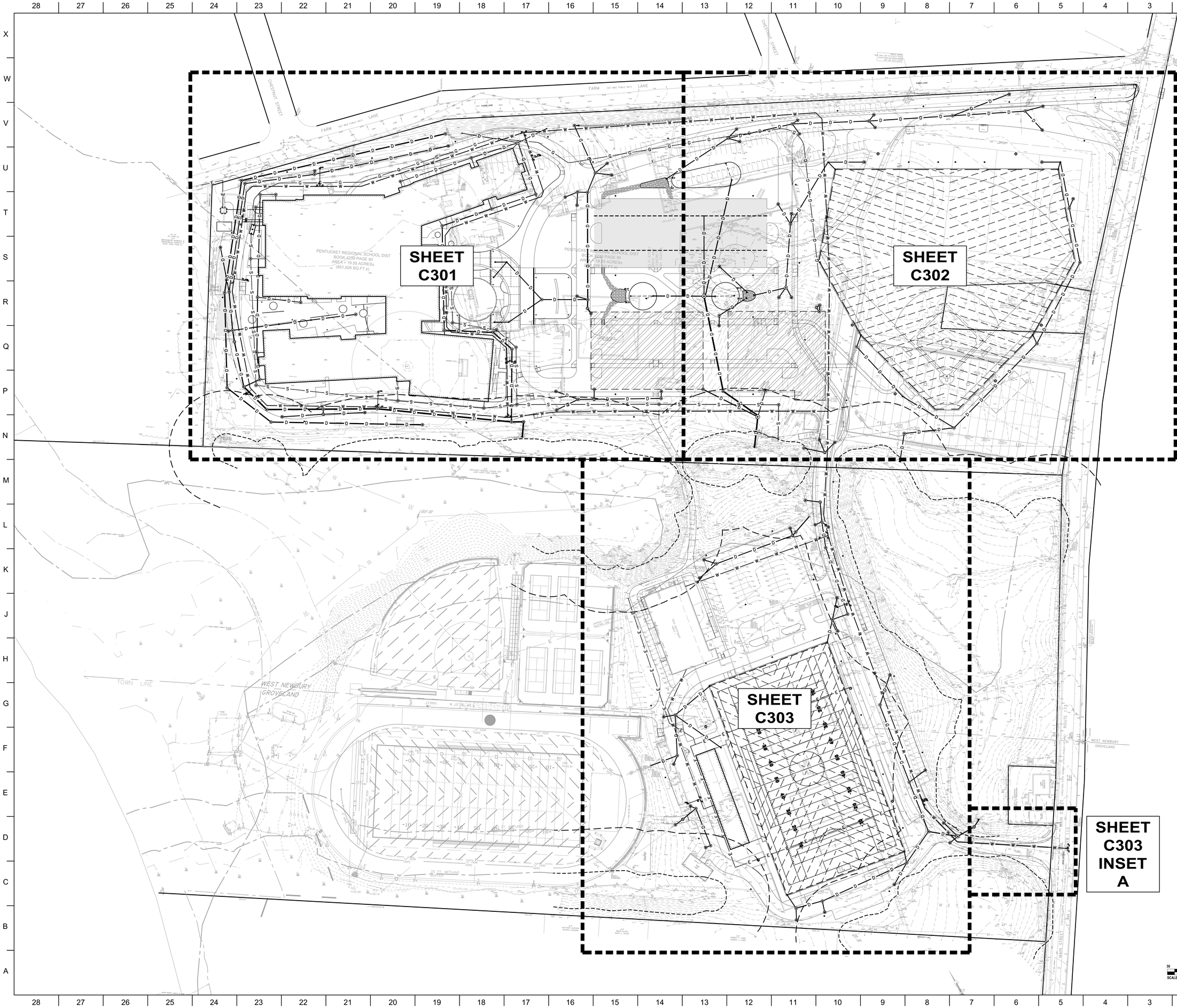

DORE + WHITTIER
MASSACHUSETTS
260 MERRIMAC ST. BUILDING 7, 2ND FLOOR
NEWBURYPORT, MA 01950
P. 978-499-2999
VERMONT
212 BATTERY STREET
BURLINGTON, VT 05401
P. 802.863.1423
WWW.DOREANDWHITTIER.COM

Nitsch Engineering
www.nitschengineering.com
2 Center Plaza, Suite 430
Boston, MA 02108
T: (617) 338-0063
F: (617) 338-6472
- Civil Engineering
- Land Surveying
- Transportation Engineering
- Structural Engineering
- Green Infrastructure
- Planning
- GIS

PROJECT NUMBER:

SEAL AND SIGNATURE:

REVISIONS:

NO.	DATE	TITLE

PENTUCKET REGIONAL SCHOOL DISTRICT BUILDING PROJECT

24 MAIN STREET
WEST NEWBURY, MA 01985

ISSUE TITLE AND DATE:

PLANNING BOARD
APPLICATION - REVISED
01/31/2020

SHEET TITLE:
Site Utility Key Plan

SHEET NUMBER:
C3.00

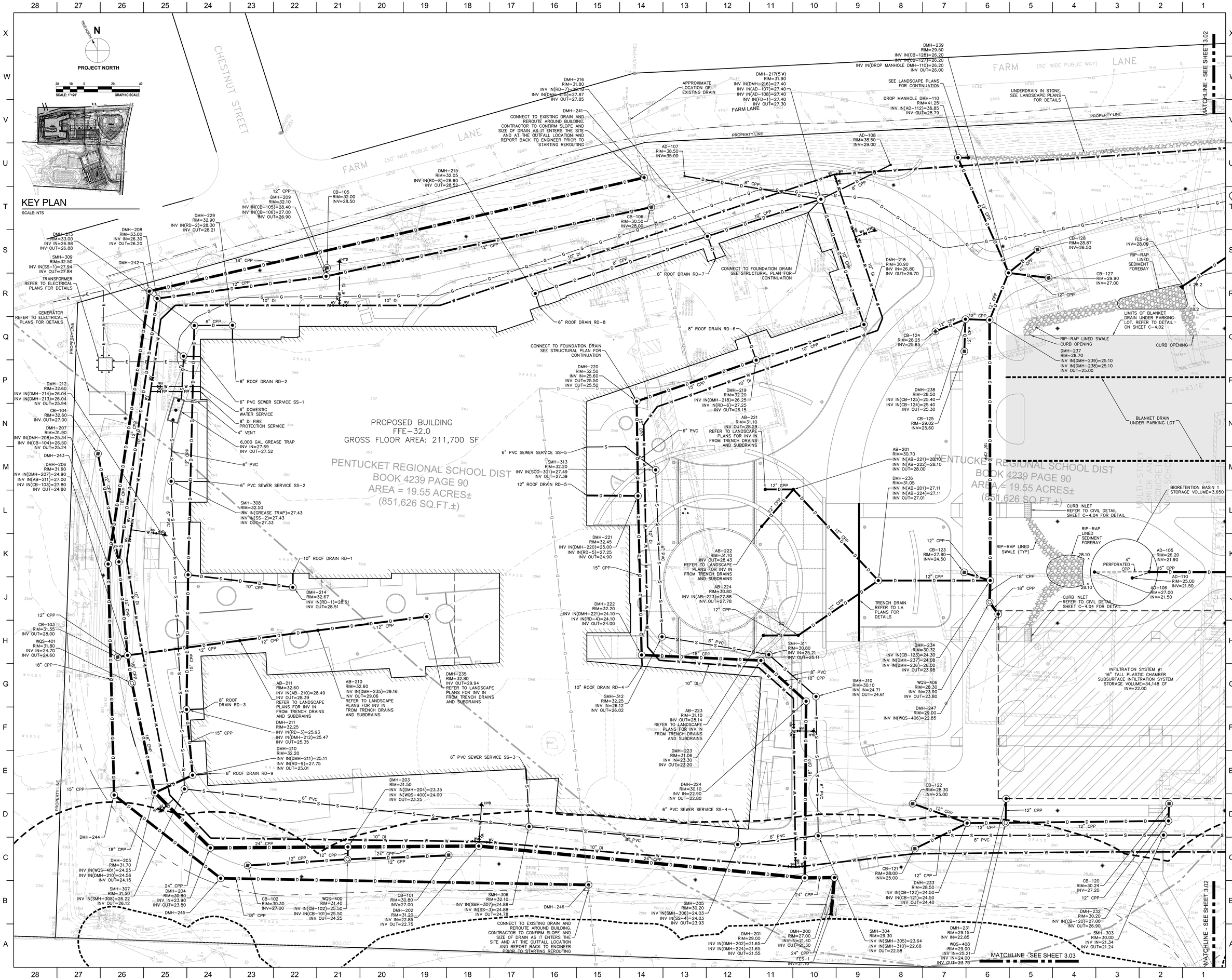

DORE + WHITTIER
MASSACHUSETTS
260 MERRIMAC ST. BUILDING 7, 2ND FLOOR
NEWBURYPORT, MA 01950
P. 978-499-2999
VERMONT
212 BATTERY STREET
BURLINGTON, VT 05401
P. 802.863.1463
WWW.DOREANDWHITTIER.COM

Nitsch Engineering
www.nitschengineering.com
2 Center Plaza, Suite 430
Boston, MA 02108
T: (617) 338-0063
F: (617) 338-6472
- Civil Engineering
- Land Surveying
- Transportation Engineering
- Structural Engineering
- Green Infrastructure
- Planning
- GIS

NOTICE
THE CONTRACTOR IS RESPONSIBLE FOR VERIFYING DIMENSIONS AND ELEVATIONS PRIOR TO CONSTRUCTION OR FABRICATION. ANY DISCREPANCIES SHALL BE REPORTED TO THE ENGINEER IMMEDIATELY.
THE CONTRACTOR IS RESPONSIBLE FOR ALL CONSTRUCTION PERFORMED, MATERIALS INSTALLED AND EQUIPMENT USED IN ACCORDANCE WITH ALL APPLICABLE STATE AND LOCAL CODES AND REGULATIONS.

PROJECT NUMBER:

SEAL AND SIGNATURE:

REVISIONS:

NO.	DATE	TITLE

PENTUCKET REGIONAL SCHOOL DISTRICT BUILDING PROJECT

24 MAIN STREET
WEST NEWBURY, MA 01985

ISSUE TITLE AND DATE:

PLANNING BOARD
APPLICATION - REVISED
01/31/2020

SHEET TITLE:
Site Utility Plan

SHEET NUMBER:
C3.01

MATCHLINE - SEE SHEET 3.01

MATCHLINE - SEE SHEET 3.01

MATCHLINE - SEE SHEET 3.02

FARM (50' WIDE PUBLIC WAY) LANE

FARM LANE

PROPERTY LINE

MAIN STREET

ROUTE 113

APPROXIMATE LOCATION OF EXISTING DRAIN

DMH-225
RIM=34.75
INV IN(DMH-226)=32.00
INV IN(CB-116)=32.00
INV IN(CB-117)=32.00
INV OUT=31.90

DMH-226
RIM=37.40
INV IN(DMH-227)=34.00
INV IN(CB-114)=34.00
INV IN(CB-115)=34.00
INV OUT=33.90

CB-116
RIM=35.50
INV=32.20

CB-114
RIM=37.50
INV=34.20

CB-115
RIM=37.50
INV=34.20

CB-117
RIM=35.50
INV=32.20

ADJUST RIM TO MEET PROPOSED GRADE

AD-101
RIM=27.10
INV=23.00

BIORETENTION BASIN 3
STORAGE VOLUME= 6,200 CF

4" PERF. CPP

AD-100
RIM=25.00
INV IN(AD-101)=23.00
INV OUT=22.90

LIMITS OF BLANKET DRAIN UNDER PARKING LOT. REFER TO DETAIL ON SHEET C-4.02

BLANKET DRAIN

CB-132
RIM=32.60
INV=30.10

CB-131
RIM=33.00
INV=30.30

DMH-254
RIM=33.05
INV IN(CB-131)=30.00
INV IN(CB-132)=30.00
INV IN(AB-231)=30.00
INV OUT=29.90

DMH-252(6'ø)
RIM=31.30
INV IN(AD-100)=30.68
INV IN(AD-103)=21.75
INV IN(AD-105)=21.49
INV IN(CO-9)=21.89
INV OUT=21.40

CB-135
RIM=31.00
INV=29.00

BLANKET DRAIN

BIORETENTION BASIN 2
STORAGE VOLUME=3,650 CF

AD-104
RIM=26.00
INV=22.00

AD-103
RIM=27.00
INV=21.90

4" PERF. CPP

DMH-249
RIM=31.10
INV IN(CB-136)=28.72
INV OUT=28.72

CB-136
RIM=31.00
INV=29.00

TIE INTO EXISTING 4" GAS LINE

CONNECT EXISTING DRAIN PIPES TO MANHOLE

DMH-253(5'ø)
RIM=31.80
INV IN(DMH-254)=29.00
INV IN(CB-134)=28.90
INV IN(CB-133)=28.90
INV OUT=28.70

FES-2
INV=28.38

FES-4
INV=28.25

FES-3
INV=28.86

RIP-RAP LINED SEDIMENT FOREBAY

CB-133
RIM=31.50
INV=29.00

OFFLINE WQS-409
RIM=35.00
INV IN(DMH-240)=29.50
INV OUT=29.40

CB-134
RIM=31.50
INV=29.00

DMH-248
RIM=36.00
INV IN(DMH-240)=29.00
INV IN(OFFLINE WQS-409)=29.00

DETENTION BASIN #1
3.5' TALL CONCRETE CHAMBERS ON CONCRETE SLAB
STORAGE VOLUME=70,200 CF
INV=25.00

OCS-400
RIM=31.00
INV OUT=18.57

EXISTING DETENTION POND

OCS-401
RIM=32.10
INV=25.00

SMH-302
RIM=32.10
INV IN=20.20
INV OUT=20.01

CONNECT TO EXISTING MANHOLE
INV=19.18

DMH-251
RIM=31.45
INV IN=20.55
INV OUT=18.41

DMH-250(6'ø)
RIM=26.09
INV IN(DMH-251)=25.09
INV IN(OCS-400)=18.00
INV IN(OCS-401)=21.50
INV OUT=17.92

HW-2
INV=17.40

TIE INTO EXISTING HEAD WALL

DMH-261
RIM=25.77
INV IN=22.00

CB-151
RIM=27.70
INV=24.00

CB-152
RIM=27.70
INV=24.00

WQS-402
RIM=28.20
INV IN(CB-151)=23.50
INV IN(CB-152)=23.50
INV OUT=23.25

CB-112
RIM=39.55
INV=36.20

CB-113
RIM=39.55
INV=36.20

DMH-227
RIM=39.50
INV IN(DMH-263)=36.00
INV IN(CB-112)=36.00
INV IN(CB-113)=36.00
INV OUT=35.90

AB-231
RIM=41.40
INV IN(CB-145)=37.66
INV IN(TM-10)=37.66
INV OUT=37.66

SEE LA PLANS FOR CONTINUATION

CB-145
RIM=41.01
INV=38.50

SEE LANDSCAPE PLANS FOR DETAILS

DMH-263
RIM=41.80
INV IN(DMH-228)=38.37
INV IN(CB-118)=38.37
INV OUT=38.27

APPROXIMATE LOCATION OF EXISTING DRAIN THROUGH SITE

CB-118
RIM=41.50
INV=39.00

ADJUST RIM TO MEET PROPOSED GRADE

DMH-228
RIM=44.20
INV IN(CB-110)=40.50
INV IN(CB-111)=40.50
INV OUT=40.40

CB-110
RIM=44.50
INV=41.00

CB-111
RIM=44.50
INV=41.00

CB-142
RIM=41.00
INV=38.27

AB-233
RIM=39.75
INV IN(CB-142)=37.98
INV IN(TM-2)=37.69
INV OUT=37.69

SEE LA PLANS FOR CONTINUATION

SEE LANDSCAPE PLANS FOR FIELD DRAINAGE

CB-141
RIM=40.00
INV OUT=37.34

DMH-259
RIM=40.93
INV IN(CB-141)=37.16
INV IN(AB-233)=37.16
INV OUT=37.06

DMH-258
RIM=41.80
INV IN(DMH-259)=36.10
INV OUT=36.00

REFER TO LA PLANS FOR FIELD UNDERDRAINAGE DETAILS AND ELEVATIONS

DMH-240
RIM=36.00
INV OUT=30.70
INV OUT=30.00

SEE LA PLANS FOR CONTINUATION

SEE LA PLANS FOR CONTINUATION

DMH-257
RIM=41.50
INV IN(DMH-258)=34.40
INV IN(TM-3)=34.40
INV OUT=34.30

DMH-262
RIM=39.50
INV IN(TM-4)=36.99
INV OUT=36.89

AB-235
RIM=41.60
INV IN(DMH-262)=35.71
INV OUT=35.61

DMH-255
RIM=32.00
INV IN=26.80
INV OUT=26.70

DMH-256
RIM=41.50
INV IN(DMH-257)=32.24
INV IN(AB-235)=32.24
INV OUT=32.14

MATCHLINE - SEE SHEET 3.02

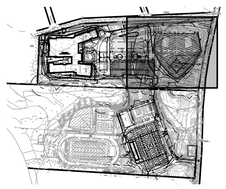

KEY PLAN

SCALE: NTS

DORE + WHITTIER
MASSACHUSETTS
260 MERRIMAC ST. BUILDING 7, 2ND FLOOR
NEWBURYPORT, MA 01950
P. 978-499-2999
VERMONT
212 BATTERY STREET
BURLINGTON, VT 05401
P. 802.863.1563
WWW.DOREANDWHITTIER.COM

Nitsch Engineering
www.nitschengineering.com
2 Center Plaza, Suite 430
Boston, MA 02108
T: (617) 338-0063
F: (617) 338-6472
- Civil Engineering
- Land Surveying
- Transportation Engineering
- Structural Engineering
- Green Infrastructure
- Planning
- GIS

PROJECT NUMBER:

SEAL AND SIGNATURE:

REVISIONS:

NO.	DATE	TITLE

PENTUCKET REGIONAL SCHOOL DISTRICT BUILDING PROJECT

24 MAIN STREET
WEST NEWBURY, MA 01985

ISSUE TITLE AND DATE:

PLANNING BOARD APPLICATION - REVISED
01/31/2020

SHEET TITLE:
Site Utility Plan

SHEET NUMBER:
C3.02

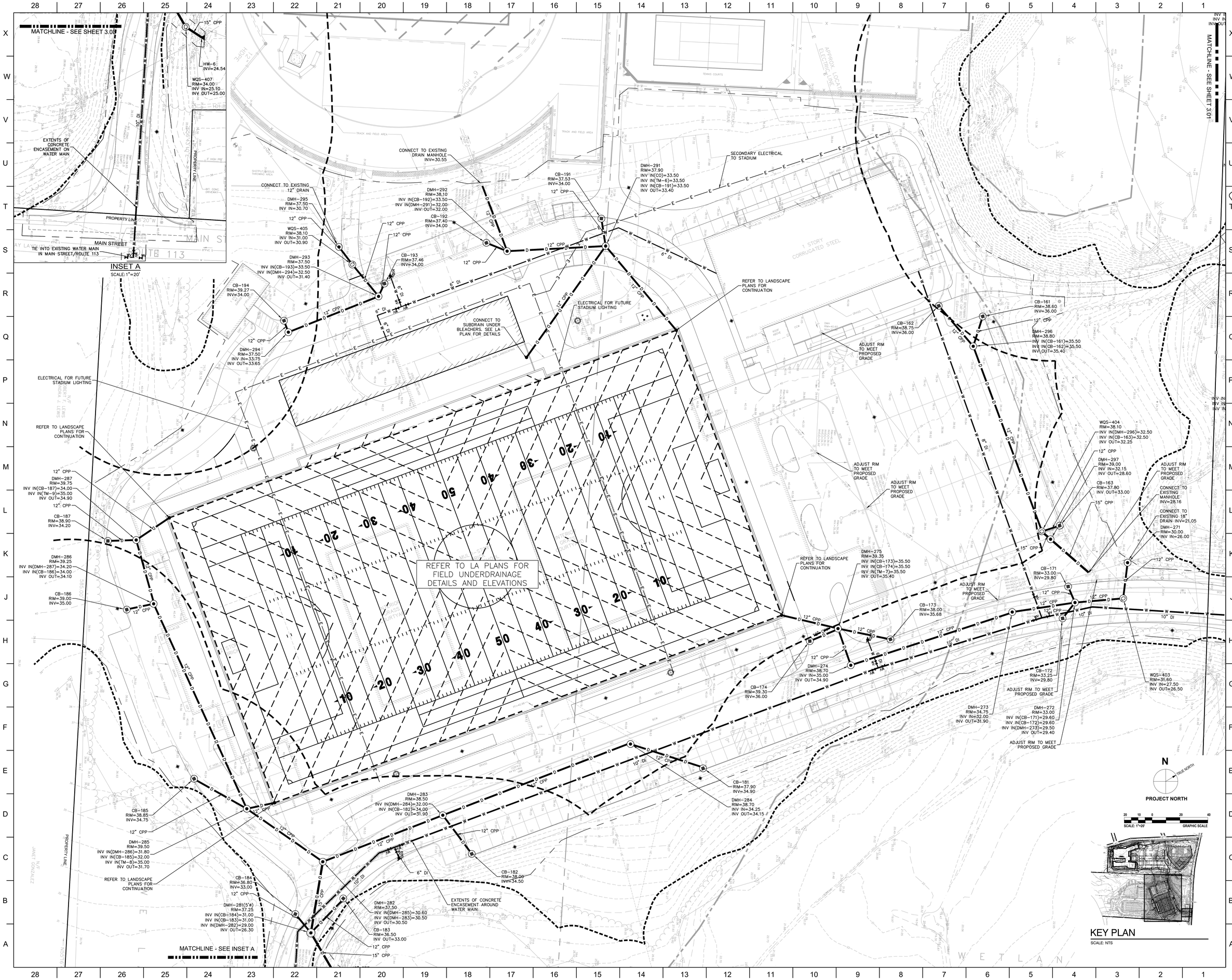

DORE + WHITTIER
MASSACHUSETTS
265 MERRIMAC ST. BUILDING 7, 2ND FLOOR
NEWBURYPORT, MA 01950
P. 978-499-2999
VERMONT
212 BATTERY STREET
BURLINGTON, VT 05401
P. 802.863.1463
WWW.DOREANDWHITTIER.COM

Nitsch Engineering
www.nitschengineering.com
2 Center Plaza, Suite 430
Boston, MA 02108
T. (617) 338-0063
F. (617) 338-6472
- Civil Engineering
- Land Surveying
- Transportation Engineering
- Structural Engineering
- Green Infrastructure
- Planning
- GIS

PROJECT NUMBER:

SEAL AND SIGNATURE:

REVISIONS:

NO.	DATE	TITLE

PENTUCKET REGIONAL SCHOOL DISTRICT BUILDING PROJECT

24 MAIN STREET
WEST NEWBURY, MA 01985

ISSUE TITLE AND DATE:

PLANNING BOARD APPLICATION - REVISED 01/31/2020

SHEET TITLE:

Site Utility Plan

SHEET NUMBER:

C3.03

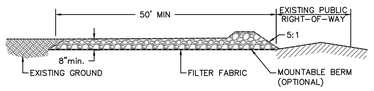

SIDE ELEVATION

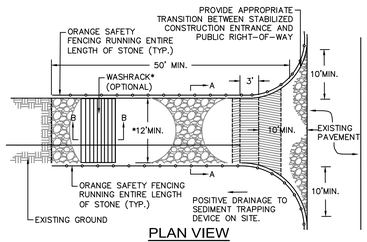

PLAN VIEW

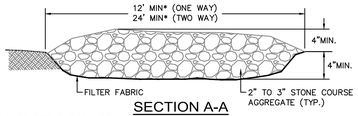

SECTION A-A

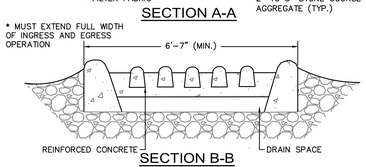

SECTION B-B

CONSTRUCTION SPECIFICATIONS

CONSTRUCTION SPECIFICATIONS

LENGTH – GREATER THAN OR EQUAL TO 50 FEET

WIDTH – TWELVE FOOT MINIMUM (ONE WAY), TWENTY FOUR FOOT MINIMUM (TWO WAY), BUT NOT LESS THAN THE FULL WIDTH AT POINTS WHERE INGRESS OR EGRESS OCCURS.

SURFACE WATER – ALL SURFACE WATER FLOWING OR DIVERTED TOWARD CONSTRUCTION ENTRANCES SHALL BE PIPED ACROSS THE ENTRANCE. IF PIPING IS IMPRACTICAL, A MOUNTABLE BERM SHALL BE PERMITTED.

THICKNESS – 8"

MAINTENANCE – THE ENTRANCE SHALL BE MAINTAINED IN A CONDITION WHICH SHALL PREVENT TRACKING OR FLOWING OF SEDIMENT ONTO PUBLIC RIGHTS-OF-WAY. THIS MAY REQUIRE PERIODIC TOP DRESSING WITH ADDITIONAL STONE AS CONDITIONS DEMAND AND REPAIR OR CLEANOUT OF ANY MEASURES USED TO TRAP SEDIMENT. ALL SEDIMENT SPILLED, DROPPED, WASHED OR TRACKED ONTO PUBLIC RIGHTS-OF-WAY MUST BE REMOVED IMMEDIATELY.

PERIODIC INSPECTION AND NEEDED MAINTENANCE SHALL BE PROVIDED.

STABILIZED CONSTRUCTION ENTRANCE

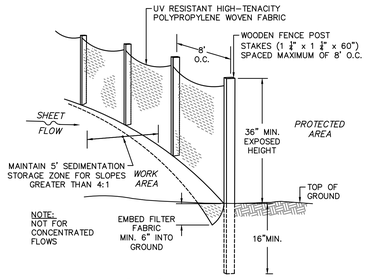

PERSPECTIVE VIEW

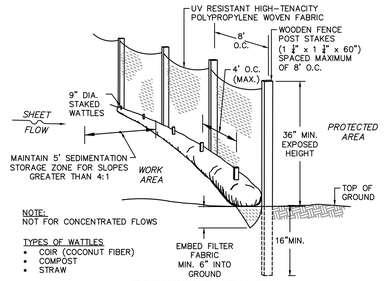

PERSPECTIVE VIEW

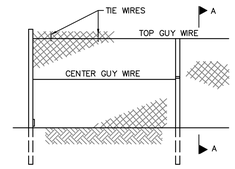

ELEVATION

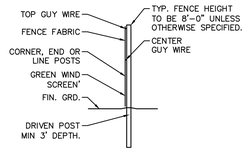

SECTION A-A

CONSTRUCTION FENCE AND GATE NOTES

1. FABRIC SHALL BE 0.148" WIRE, WOVEN INTO APPROXIMATELY 2" DIAMOND MESH.
2. THE FENCE FABRIC SHALL BE ZINC COATED STEEL OR ALUMINUM COATED STEEL.
3. FENCE POSTS SHALL RECEIVE THE SAME COATING AND TREATMENT AS THE FENCE FABRIC (DESCRIBED ABOVE).
4. THE CONTRACTOR SHALL ADD A GREEN WIND SCREEN
5. LINE POSTS SHALL BE 2⅛" O.D. END OR CORNER POSTS SHALL BE 3" O.D.
6. THE CONTRACTOR IS RESPONSIBLE FOR SURFACE RESTORATION ONCE THE FENCE IS REMOVED.
7. THE CONTRACTOR SHALL REMOVE AND DISPOSE OF THE TEMPORARY CONSTRUCTION FENCE AT THE CONCLUSION OF THE PROJECT.

CHAIN LINK CONSTRUCTION FENCE

NOT TO SCALE

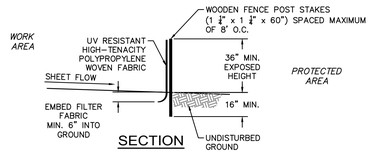

PERIMETER PROTECTION BARRIER (A)

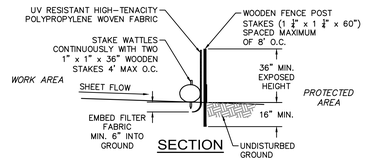

PERIMETER PROTECTION BARRIER (B)
SILT FENCE DETAIL WITH WATTLES

NOT TO SCALE

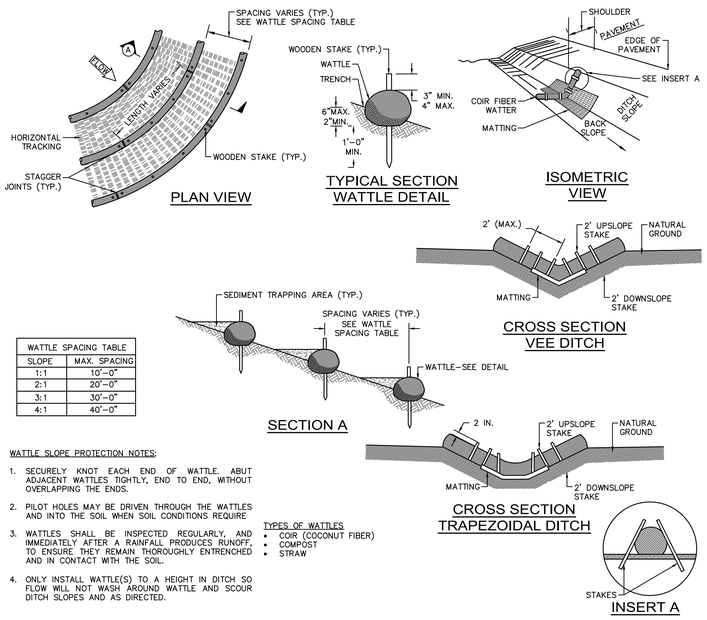

WATTLE SPACING TABLE	
SLOPE	MAX. SPACING
1:1	10'-0"
2:1	20'-0"
3:1	30'-0"
4:1	40'-0"

WATTLE SLOPE PROTECTION NOTES:

1. SECURELY KNOT EACH END OF WATTLE. ABUT ADJACENT WATTLES TIGHTLY, END TO END, WITHOUT OVERLAPPING THE ENDS.
2. PILOT HOLES MAY BE DRIVEN THROUGH THE WATTLES AND INTO THE SOIL WHEN SOIL CONDITIONS REQUIRE
3. WATTLES SHALL BE INSPECTED REGULARLY, AND IMMEDIATELY AFTER A RAINFALL PRODUCES RUNOFF, TO ENSURE THEY REMAIN THOROUGHLY ENTRENCHED AND IN CONTACT WITH THE SOIL.
4. ONLY INSTALL WATTLE(S) TO A HEIGHT IN DITCH SO FLOW WILL NOT WASH AROUND WATTLE AND SCOUR DITCH SLOPES AND AS DIRECTED.

TYPES OF WATTLES
- COIR (COCONUT FIBER)
- COMPOST
- STRAW

EROSION CONTROL BARRIER (E)
WATTLES - STEEP SLOPE PROTECTION

NOT TO SCALE

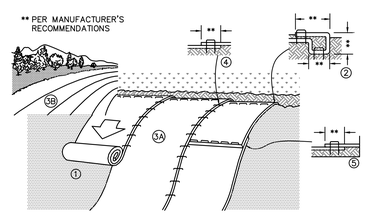

SLOPE INSTALLATION

NOTES:

1. PREPARE SOIL BEFORE INSTALLING EROSION CONTROL BLANKETS (ECB's), INCLUDING ANY NECESSARY APPLICATION OF LIME, FERTILIZER, AND SEED.
2. BEGIN AT THE TOP OF THE SLOPE BY ANCHORING THE ECB's IN ACCORDANCE WITH THE MANUFACTURER'S RECOMMENDATIONS. APPLY SEED TO COMPACTED SOIL AND FOLD REMAINING PORTION OF ECB's BACK OVER SEED AND COMPACTED SOIL. SECURE ECB's OVER COMPACTED SOIL WITH A ROW OF STAKES/STAPLES SPACED ACCORDANCE TO THE MANUFACTURER'S RECOMMENDATIONS ACROSS THE WIDTH OF THE ECB's.
3. ROLL THE ECB's DOWN (A) OR HORIZONTALLY (B) ACROSS THE SLOPE. ECB's WILL UNROLL WITH APPROPRIATE SIDE AGAINST THE SOIL SURFACE. ALL ECB's MUST BE SECURELY FASTENED TO SOIL SURFACE BY PLACING STAKES/STAPLES IN APPROPRIATE LOCATIONS AS SHOWN ON THE STAKE/STAPLE PATTERN GUIDE.
4. THE EDGES OF PARALLEL ECB's MUST BE STAKED/STAPLED WITH OVERLAP DEPENDING ON ECB's TYPE. SEE THE MANUFACTURER'S RECOMMENDATIONS.
5. CONSECUTIVE ECB's SPLICED DOWN THE SLOPE MUST BE PLACED END OVER END (SHINGLE STYLE) WITH AN OVERLAP (SEE THE MANUFACTURER'S RECOMMENDATIONS). STAKE/STAPLE THROUGH OVERLAPPED AREA, ACROSS ENTIRE ECB's WIDTH PER MANUFACTURER'S RECOMMENDATIONS.
6. IN LOOSE SOIL CONDITIONS, THE USE OF STAKE OR STAPLE LENGTHS GREATER THAN 6" MAY BE NECESSARY TO PROPERLY SECURE THE ECB's.
7. THE CONTRACTOR SHALL FOLLOW ALL INSTALLATION INSTRUCTIONS AS RECOMMENDED BY THE MANUFACTURER.

TEMPORARY EROSION CONTROL BLANKET FOR STEEP SLOPES DETAIL

NOT TO SCALE

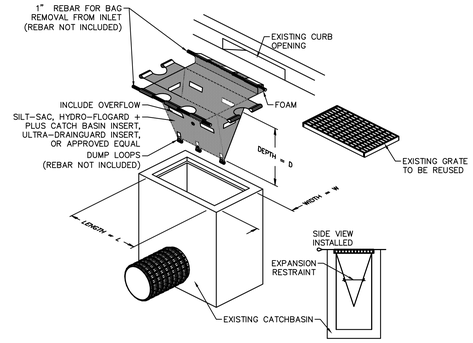

THIS METHOD OF INLET PROTECTION IS APPLICABLE WHERE THE INLET DRAINS SHEET, OVERLAND OR CONCENTRATED FLOWS (NOT GREATER THAN 1 CFS). THE METHOD CAN DRAIN FLAT AREA TO STEEP SLOPES. INLET CAPACITY WILL BE DECREASED WITH THIS METHOD AND THE CONTRACTOR SHALL EXPECT PONDING DURING HIGH FLOW EVENTS.

INLET PROTECTION (2)
CATCH BASIN W/ SILTATION SACK

NOT TO SCALE

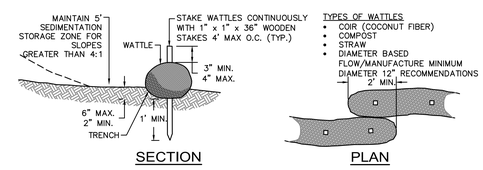

TYPES OF WATTLES
- COIR (COCONUT FIBER)
- COMPOST
- STRAW
- DIAMETER BASED FLOW/MANUFACTURE MINIMUM DIAMETER 12" RECOMMENDATIONS

WATTLES - SLOPE PROTECTION FOR SLOPES LESS THAN 10:1

NOT TO SCALE

DORE + WHITTIER
MASSACHUSETTS
260 MERRIMAC ST. BUILDING 7, 2ND FLOOR
NEWBURYPORT, MA 01950
P. 978-499-2999
VERMONT
212 BATTERY STREET
BURLINGTON, VT 05401
P. 802.863.1743
WWW.DOREANDWHITTIER.COM

Nitsch Engineering
www.nitschengineering.com
2 Center Plaza, Suite 430
Boston, MA 02108
T: (617) 338-0063
F: (617) 338-6472
- Civil Engineering
- Land Surveying
- Transportation Engineering
- Structural Engineering
- Green Infrastructure
- Planning
- GIS

PROJECT NUMBER:

SEAL AND SIGNATURE:

REVISIONS:

NO.	DATE	TITLE

PENTUCKET REGIONAL SCHOOL DISTRICT BUILDING PROJECT

24 MAIN STREET
WEST NEWBURY, MA 01985

ISSUE TITLE AND DATE:

PLANNING BOARD APPLICATION - REVISED 01/31/2020

SHEET TITLE:
EROSION CONTROL DETAILS

SHEET NUMBER:
C4.00

TRAFFIC SIGN SUMMARY

IDENTIFI-CATION NUMBER	SIZE OF SIGN WIDTH	SIZE OF SIGN HEIGHT	TEXT	DIMENSIONS (in.) LETTER HEIGHT	DIMENSIONS (in.) VERTICAL SPACING	DIMENSIONS (in.) ARROW	NUMBER OF SIGNS REQUIRED	COLOR BACK-GROUND	COLOR LEGEND	COLOR BORDER	MOUNTING SETTING
R1-1	24"	24"	STOP	SEE MUTCD STANDARDS	SEE MUTCD STANDARDS	SEE MUTCD STANDARDS	9	SEE MUTCD STANDARDS	SEE MUTCD STANDARDS	SEE MUTCD STANDARDS	POST
R3-1	24"	24"					NA				POST
R4-7	24"	30"					2				POST
R5-1	24"	24"	DO NOT ENTER				2				POST
R6-1L	36"	12"	ONE WAY				4				POST
R7-8	12"	18"	RESERVED PARKING				14				POST
R7-8P	18"	9"	VAN ACCESSIBLE				8				POST
SP-1	24"	30"	XXXX XXXX RESERVED PARKING SIGN, LETTERING AS DIRECTED BY OWNER				NA				POST
S5-1	24"	48"	(S4-3P) SCHOOL 20 (R2-1) (S4-4P)				NA				POST
S5-2	24"	30"	END SCHOOL ZONE				NA				POST
W6-1	36"	36"					2				POST
W11-2	30"	30"					4				POST
W16-7P	12"	24"					20				POST
R5-11	30"	24"	AUTHORIZED VEHICLES ONLY				5				POST

NOTES:

1. PAVEMENT MARKINGS SHALL MEET THE REQUIREMENTS OF STANDARD PAVEMENT MARKINGS FROM THE MANUAL ON UNIFORM TRAFFIC CONTROL DEVICES, LATEST EDITION (MUTCD).
2. PROPOSED PAVEMENT MARKINGS SHALL BE PAINT PER SPECIFICATIONS.
3. PROPOSED SIGN POSTS SHALL BE POST TYPE (TELESCOPIC POST).
4. SIGNS SHALL BE 90° TO THE CURB AND FACING THE FLOW OF TRAFFIC.
5. SIGNS TO BE MOUNTED NEAR THE CURB LINE SHALL BE SET BACK 12" FROM THE EDGE OF THE SIGN PANEL TO THE CURB LINE. NO SIGN SHALL OVERHANG THE CURB LINE.
6. SIGNS SHALL BE MOUNTED TO PROVIDE A 7' MINIMUM CLEARANCE BETWEEN THE BOTTOM OF THE SIGN AND FINISH GRADE UNLESS OTHERWISE INDICATED.
7. SEE LANDSCAPE PLANS FOR LEED SIGNAGE.
8. FINAL LOCATION OF SIGNS TO BE COORDINATED WITH THE OWNER.

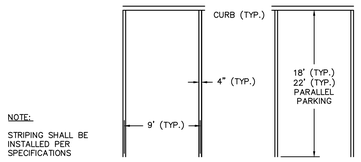

NOTE:

STRIPING SHALL BE INSTALLED PER SPECIFICATIONS

TYPICAL PARKING STRIPING DETAIL
NOT TO SCALE

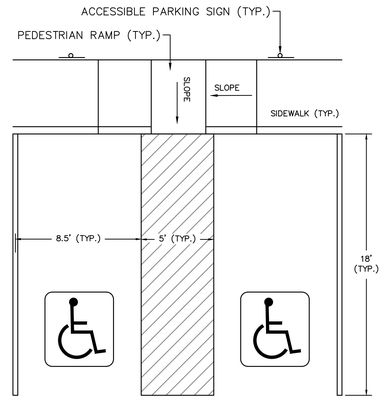

ACCESSIBLE PARKING DETAIL
NOT TO SCALE

ACCESSIBLE PARKING STENCIL DETAIL
NOT TO SCALE

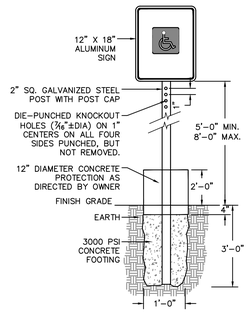

HANDICAPPED PARKING SIGNAGE DETAIL
NOT TO SCALE

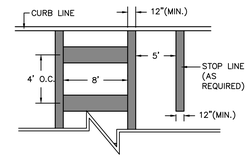

CROSSWALK DETAIL
NOT TO SCALE

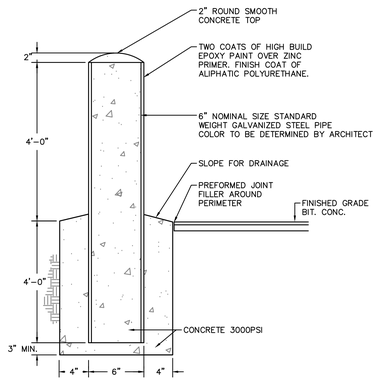

6" BOLLARD DETAIL
NOT TO SCALE

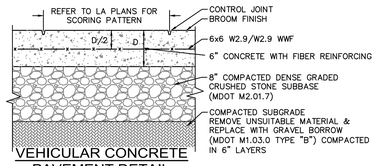

VEHICULAR CONCRETE PAVEMENT DETAIL

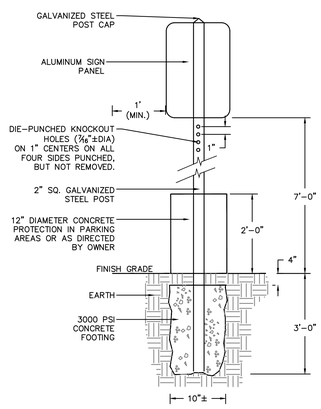

SIGNS SHALL BE SET AT RIGHT ANGLES TO THE DIRECTION, AND FACING, THE TRAFFIC INTENDED TO SERVE.

SIGN POST SETTING DETAIL
NOT TO SCALE
(SIGN PANEL UNDER 10 SF IN AREA)

NOTES:

1. SURFACE FINISH TO MATCH SURROUNDING AREA.
2. PERMANENT RESTORATION WITHIN ROADWAY SHALL BE COMPLETED BY PUBLIC WORKS DEPARTMENT

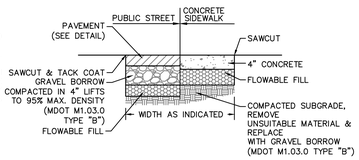

SURFACE RESTORATION WITHIN PUBLIC WAYS DETAIL
NOT TO SCALE

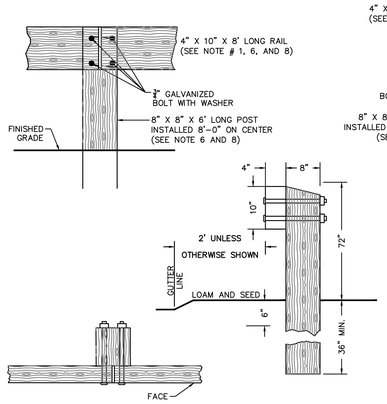

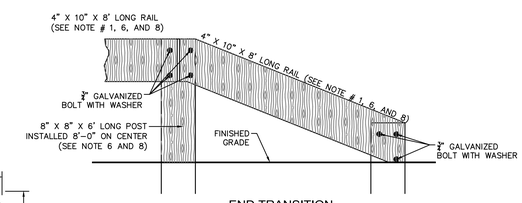

END TRANSITION

NOTES:

1. ALL WOOD SHALL BE SELECT STRUCTURAL GRADE SOUTHERN YELLOW PINE OR DOUGLAS FIR, S – 4 – S.
2. ALL WOOD SHALL BE FULL CELL PROCESS PRESSURE TREATED IN ACCORDANCE AWPB – LP33.
3. SPACE POSTS 7'–9" O.C. MAXIMUM.
4. RAIL ENDS SHALL BE BURIED OR HAVE A TERMINAL SECTION.
5. GUARD RAIL AND POST SHALL COMPLY WITH MDOT STANDARD SPECIFICATIONS M8.07.0.
6. POSTS SHALL BE INSTALLED 36" MIN. DOWN FROM FINISHED GRADE.
7. REFLECTORS TO BE INSTALLED MIDWAY BETWEEN POST LOCATIONS.
8. ENDS OF GUARD RAILS HAVE A TRANSITION TO FINISHED GROUND LEVEL.

TIMBER GUARD RAIL DETAIL
NOT TO SCALE

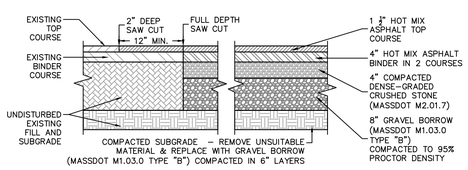

HOT MIX ASPHALT PAVING (TWO COURSES) DETAIL
NOT TO SCALE

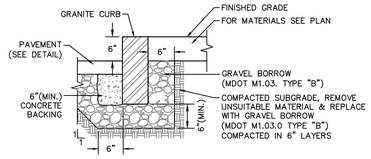

VERTICAL GRANITE CURB SETTING DETAIL
NOT TO SCALE

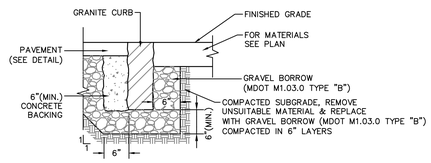

FLUSH GRANITE CURB SETTING DETAIL
NOT TO SCALE

DORE + WHITTIER
MASSACHUSETTS
260 MERRIMAC ST. BUILDING 7, 2ND FLOOR
NEWBURYPORT, MA 01950
P. 978-499-2999
VERMONT
212 BATTERY STREET
BURLINGTON, VT 05401
P. 802.863.1432
WWW.DOREANDWHITTIER.COM

Nitsch Engineering
www.nitschengineering.com
2 Center Plaza, Suite 430
Boston, MA 02108
T: (617) 338-0063
F: (617) 338-6472
- Civil Engineering
- Land Surveying
- Transportation Engineering
- Structural Engineering
- Green Infrastructure
- Planning
- GIS

PROJECT NUMBER:

SEAL AND SIGNATURE:

REVISIONS:

NO.	DATE	TITLE

PENTUCKET REGIONAL SCHOOL DISTRICT BUILDING PROJECT

24 MAIN STREET
WEST NEWBURY, MA 01985

ISSUE TITLE AND DATE:

PLANNING BOARD APPLICATION - REVISED 01/31/2020

SHEET TITLE:

SITE VEHICULAR LAYOUT AND MATERIALS DETAILS

SHEET NUMBER:

C4.01

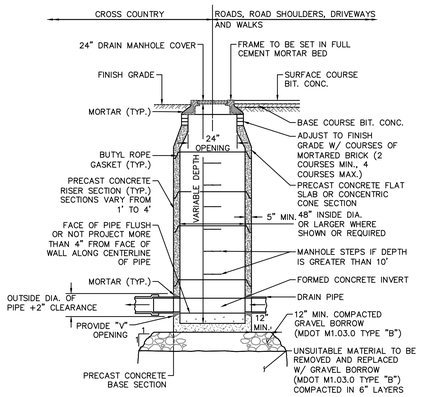

TYPICAL SHALLOW DRAIN MANHOLE DETAIL

NOT TO SCALE

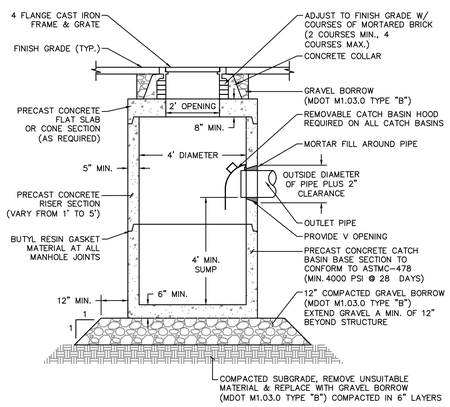

TYPICAL CATCH BASIN DETAIL

NOT TO SCALE

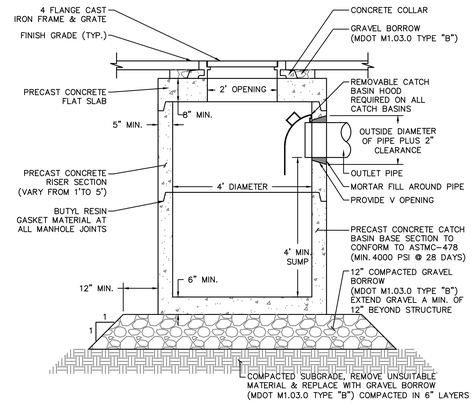

SHALLOW CATCH BASIN DETAIL

NOT TO SCALE

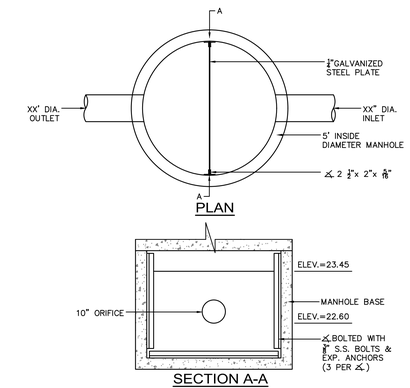

OUTLET CONTROL STRUCTURE #400

NOT TO SCALE

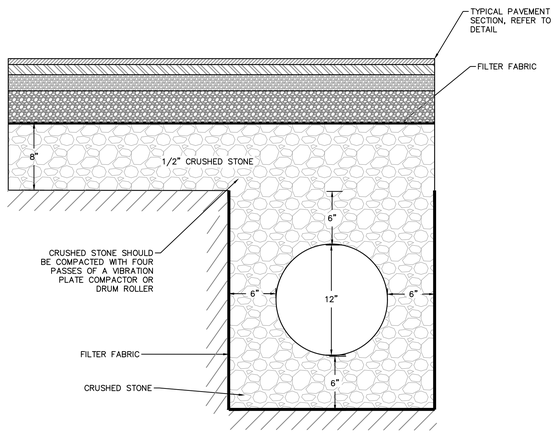

BLANKET DRAIN DETAIL

NOT TO SCALE

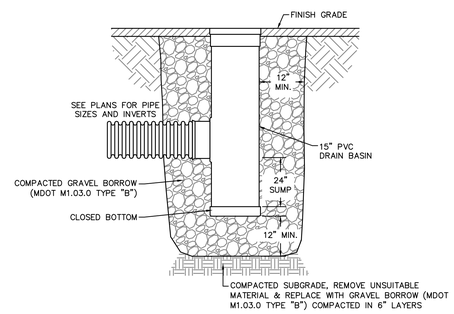

SECTION VIEW

NOTES:
1. FRAME AND GRATE SHALL BE DUCTILE IRON CONFORMING TO ASTM A536 GRADE 70-50-05.
2. 15" AREA DRAINS SHALL BE NYLOPLAST MODEL 2815 AS MANUFACTURED BY ADVANCED DRAINAGE SYSTEMS, INC., OR APPROVED EQUAL.
3. AREA DRAINS SHALL BE CUSTOM MANUFACTURED ACCORDING TO THE PLANS AND DETAIL.
4. CASTINGS SHALL BE FURNISHED WITH A BLACK PAINT.
5. SEE PLANS FOR LAYOUT AND ELEVATIONS OF DRAIN PIPES TO AREA DRAINS.

15" AREA DRAIN DETAIL

NOT TO SCALE

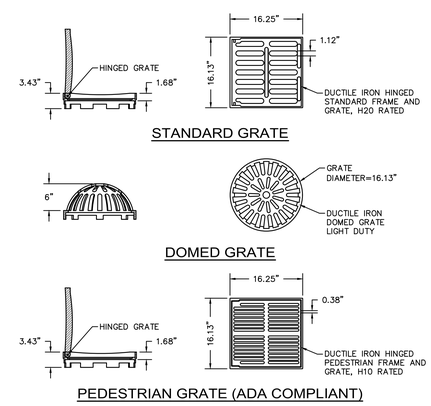

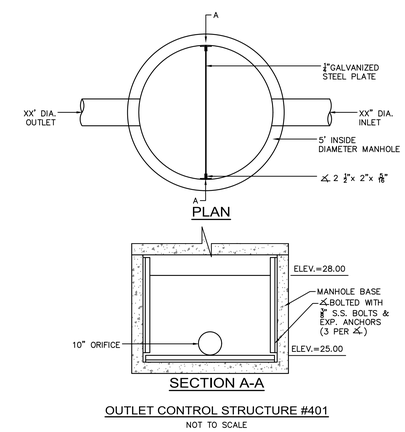

OUTLET CONTROL STRUCTURE #401

NOT TO SCALE

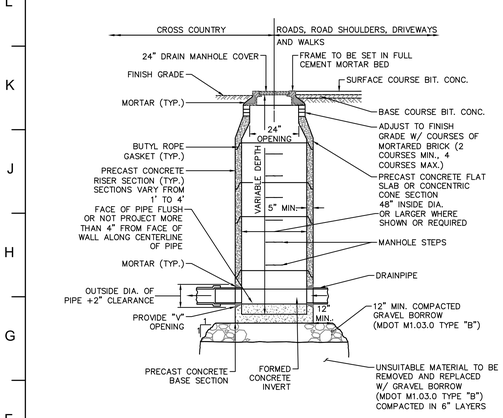

TYPICAL DRAIN MANHOLE DETAIL

NOT TO SCALE

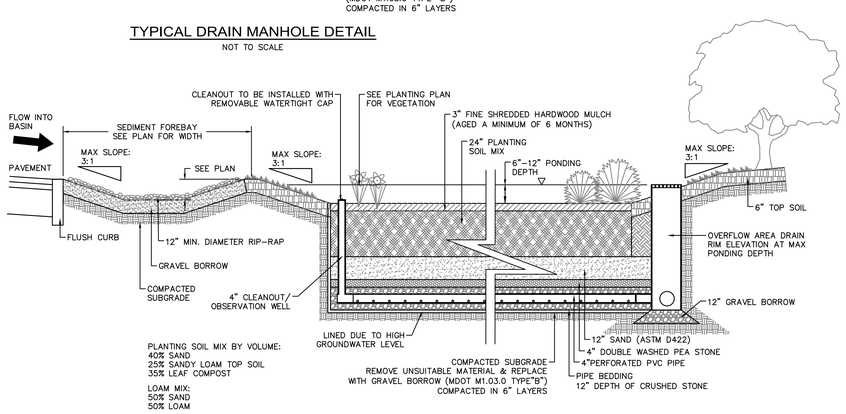

BIORETENTION BASIN W/ FOREBAY

NOT TO SCALE

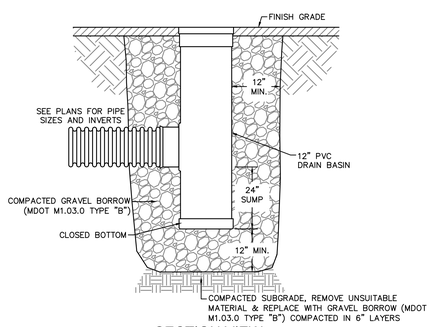

SECTION VIEW

NOTES:
1. FRAME AND GRATE SHALL BE DUCTILE IRON CONFORMING TO ASTM A536 GRADE 70-50-05.
2. 12" AREA DRAINS SHALL BE NYLOPLAST MODEL 2812 AS MANUFACTURED BY ADVANCED DRAINAGE SYSTEMS, INC., OR APPROVED EQUAL.
3. AREA DRAINS SHALL BE CUSTOM MANUFACTURED ACCORDING TO THE PLANS AND DETAIL.
4. CASTINGS SHALL BE FURNISHED WITH A BLACK PAINT.
5. SEE PLANS FOR LAYOUT AND ELEVATIONS OF DRAIN PIPES TO AREA DRAINS.

12" AREA DRAIN DETAIL

NOT TO SCALE

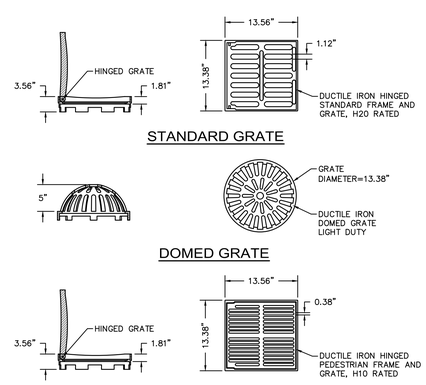

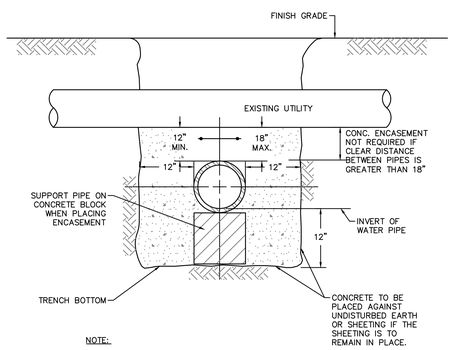

NOTE:

PIPE MUST BE BRACED VERTICALLY & HORIZONTALLY TO PREVENT FLOATATION DURING PLACEMENT OF CONCRETE

CONCRETE ENCASEMENT DETAIL AT UTILITY CROSSINGS

NOT TO SCALE

DORE + WHITTIER
MASSACHUSETTS
260 MERRIMAC ST. BUILDING 7, 2ND FLOOR
NEWBURYPORT, MA 01950
P. 978-499-2999
VERMONT
212 BATTERY STREET
BURLINGTON, VT 05401
P. 802-863-1463
WWW.DOREANDWHITTIER.COM

Nitsch Engineering
www.nitschengineering.com
2 Center Plaza, Suite 430
Boston, MA 02108
T: (617) 338-0063
F: (617) 338-6472
- Civil Engineering
- Land Surveying
- Transportation Engineering
- Structural Engineering
- Green Infrastructure
- Planning
- GIS

PROJECT NUMBER:

SEAL AND SIGNATURE:

REVISIONS:

NO.	DATE	TITLE

PENTUCKET REGIONAL SCHOOL DISTRICT BUILDING PROJECT

24 MAIN STREET
WEST NEWBURY, MA 01985

ISSUE TITLE AND DATE:

PLANNING BOARD APPLICATION - REVISED
01/31/2020

SHEET TITLE:
SITE UTILITY DETAILS

SHEET NUMBER:
C4.02

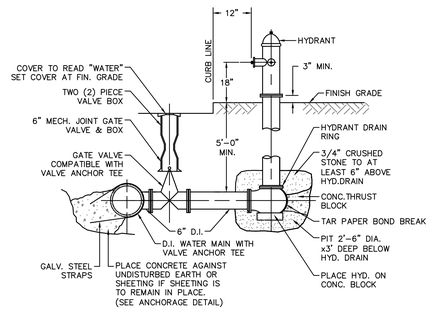

NOTE: ALL JOINTS ON HYDRANT BRANCH TO BE RESTRAINED JOINTS

FIRE HYDRANT DETAIL

NOT TO SCALE

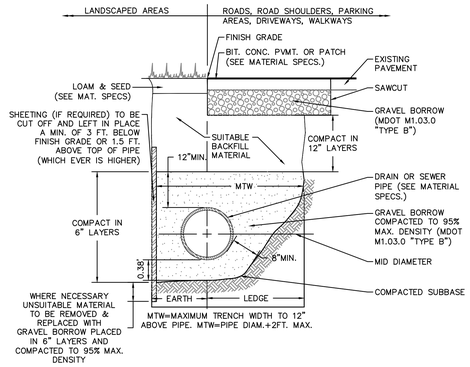

STANDARD TRENCH DETAIL FOR UTILITY PIPE

NOT TO SCALE

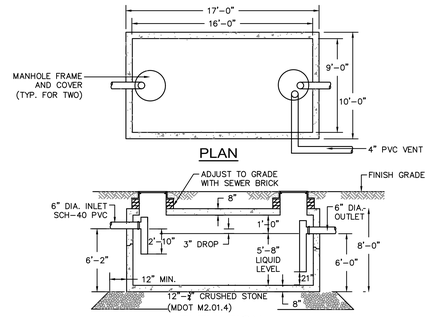

ELEVATION

SPECIFICATIONS:

1. CONCRETE MINIMUM STRENGTH – 5,000 PSI @ 28 DAYS
2. STEEL REINFORCEMENT – ASTM A615 GR. 60, A185 OR A497 – 1" MIN. COVER
3. DESIGN LOADING – AASHTO HS20-44 – EARTH COVER 1 TO 5 FEET
4. WATER TABLE – AT SURFACE
5. CONSTRUCTION JOINT – SEALED WITH 1" DIA. BUTYL RUBBER OR EQUIVALENT

6,000 GALLON GREASE TRAP DETAIL

NOT TO SCALE

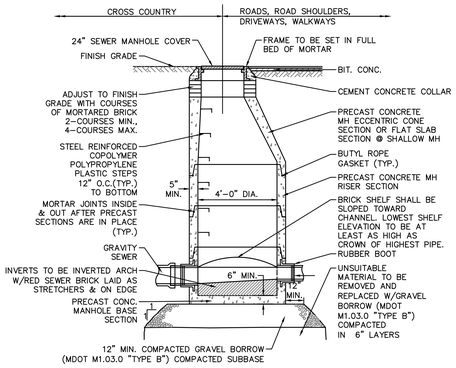

TYPICAL SEWER MANHOLE DETAIL

NOT TO SCALE

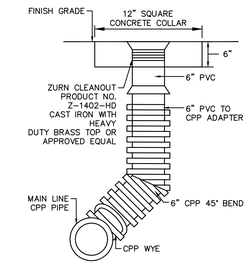

TYPICAL CLEANOUT DETAIL

NOT TO SCALE

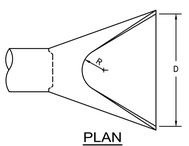

PLAN

DIA.	A	B	C	D	E	R
12"	4"	2'-0"	4'-0 ½"	2'-0"	2"	9"
15"	6"	2'-3"	3'-10"	2'-6"	2 ½"	11"
18"	9"	2'-3"	3'-10"	3'-0"	2 ½"	12"
24"	9 ¾"	3'-7 ½"	2'-6"	4'-0"	3"	14"
30"	12"	4'-6"	1'-7 ½"	5'-0"	3 ½"	18"
36"	15"	5'-3"	2'-10 ½"	6'-0"	4"	20"
42"	21"	5'-3"	2'-11"	6'-6"	4 ½"	22"
48"	24"	6'-0"	2'-7"	7'-0"	5"	22"
54"	27"	5'-3"	2'-11"	7'-6"	5 ½"	24"
60"	30"	5'-0"	3'-3"	8'-0"	6"	24"

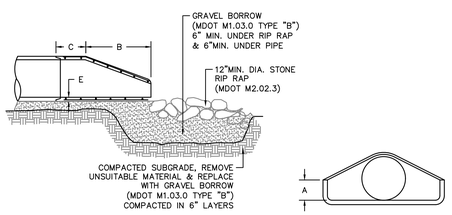

SECTION

END VIEW

PRECAST CONCRETE FLARED END SECTION

NOT TO SCALE

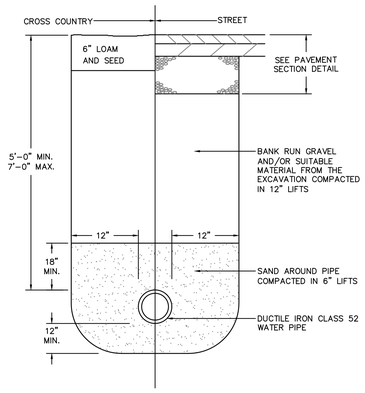

WATER TRENCH DETAIL

NOT TO SCALE

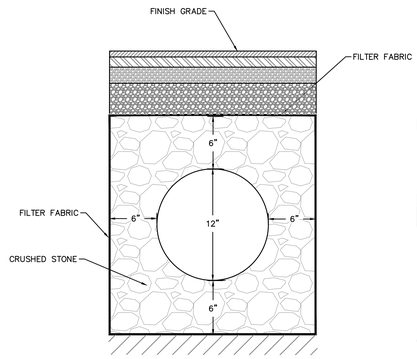

UNDERDRAIN DETAIL

NOT TO SCALE

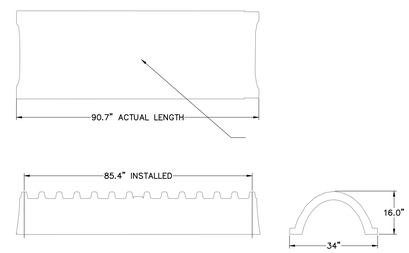

UNDERGROUND INFILTRATION SYSTEM CHAMBER

NOT TO SCALE

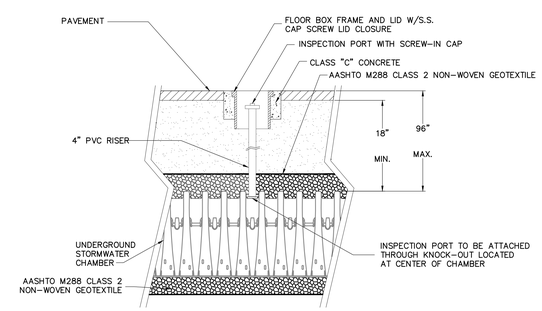

UNDERGROUND INFILTRATION SYSTEM INSPECTION PORT DETAIL

NOT TO SCALE

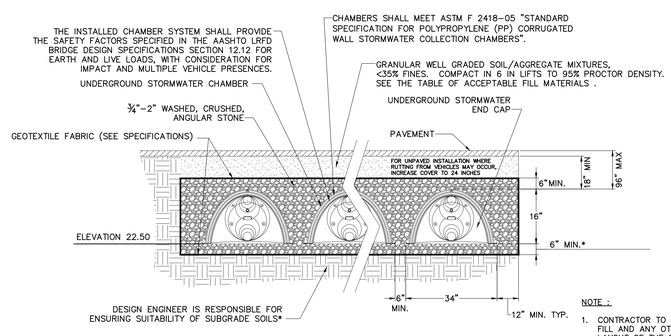

NOTE :

1. CONTRACTOR TO REMOVE EXISTING TOPSOIL, SUBSOIL, FILL AND ANY OTHER IMPERVIOUS LAYERS WITHIN THE LAYOUT OF THE SYSTEM TO THE BOTTOM OF STONE ELEVATION OF SYSTEM. INSTALL SAND FILL IN ACCORDANCE WITH TITLE V REQUIREMENTS.
2. THIS CROSS SECTION DETAILS THE REQUIREMENTS NECESSARY TO SATISFY THE SAFETY FACTORS SPECIFIED IN THE AASHTO LRFD BRIDGE DESIGN SPECIFICATIONS SECTION 12.12 FOR EARTH AND LIVE LOADS USING UNDERGROUND CHAMBERS.
3. FINAL PRODUCT TO BE SUBMITTED AND APPROVED BY THE DESIGN ENGINEER PRIOR TO CONSTRUCTION

UNDERGROUND INFILTRATION SYSTEM SECTION

NOT TO SCALE

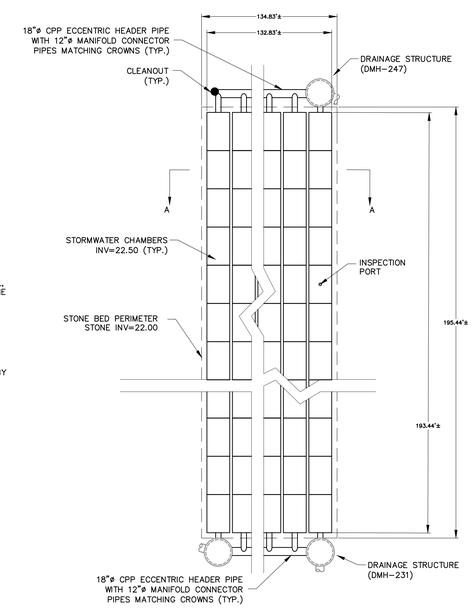

SUBSURFACE INFILTRATION SYSTEM #1

NOT TO SCALE

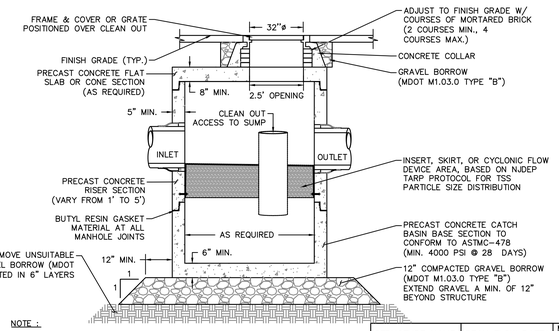

NOTE :

1. THE USE OF FLEXIBLE CONNECTIONS IS RECOMMENDED AT THE INLET AND OUTLET WHERE APPLICABLE.
2. THE COVER SHOULD BE POSITIONED OVER THE OUTLET DROP PIPE AND THE OIL CLEANOUT PIPE.
3. STRUCTURE DESIGNED FOR H20 LOADING
4. FINAL PRODUCT TO BE SUBMITTED AND APPROVED BY THE DESIGN ENGINEER PRIOR TO CONSTRUCTION

WATER QUALITY STRUCTURE DETAIL

NOT TO SCALE

STRUCTURE NAME	PEAK FLOW RATE*	MINIMUM SEDIMENT STORAGE CAPACITY
WQS#400	1.78 CFS	6 CF
WQS#401	5.10 CFS	21 CF
WQS#402	1.86 CFS	6 CF
WQS#403	4.51 CFS	7 CF
WQS#404	5.59 CFS	15 CF
WQS#405	2.39 CFS	8 CF
WQS#406	11.41 CFS	27 CF
WQS#407	10.66 CFS	17 CF
WQS#408	5.56 CFS	21 CF
WQS#409	6.05 CFS	32 CF

* PEAK FLOW RATE BASED ON RATIONAL ANALYSIS FOR A 25-YEAR STORM EVENT. STRUCTURE SHALL BE ABLE TO PASS PEAK FLOW RATE WITHOUT CAUSING A BACKWATER CONDITION.

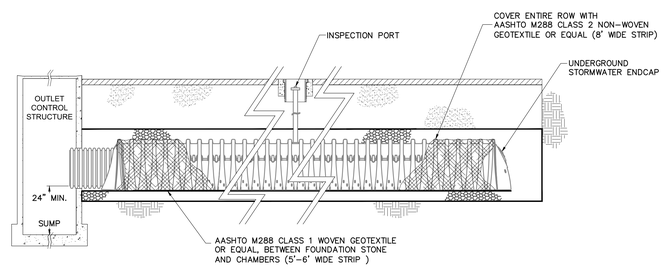

UNDERGROUND STORMWATER ISOLATION ROW DETAIL

NOT TO SCALE

DORE + WHITTIER
MASSACHUSETTS
260 MERRIMAC ST. BUILDING 7, 2ND FLOOR
NEWBURYPORT, MA 01950
P. 978-499-2999
VERMONT
212 BATTERY STREET
BURLINGTON, VT 05401
P. 802.863.1463
WWW.DOREANDWHITTIER.COM

Nitsch Engineering
www.nitschengineering.com
2 Center Plaza, Suite 430
Boston, MA 02108
T: (617) 338-0063
F: (617) 338-6472
- Civil Engineering
- Land Surveying
- Transportation Engineering
- Structural Engineering
- Green Infrastructure
- Planning
- GIS

PROJECT NUMBER:

SEAL AND SIGNATURE:

REVISIONS:

NO.	DATE	TITLE

PENTUCKET REGIONAL SCHOOL DISTRICT BUILDING PROJECT

24 MAIN STREET
WEST NEWBURY, MA 01985

ISSUE TITLE AND DATE:

PLANNING BOARD APPLICATION - REVISED 01/31/2020

SHEET TITLE:

SITE UTILITY DETAILS

SHEET NUMBER:

C4.03

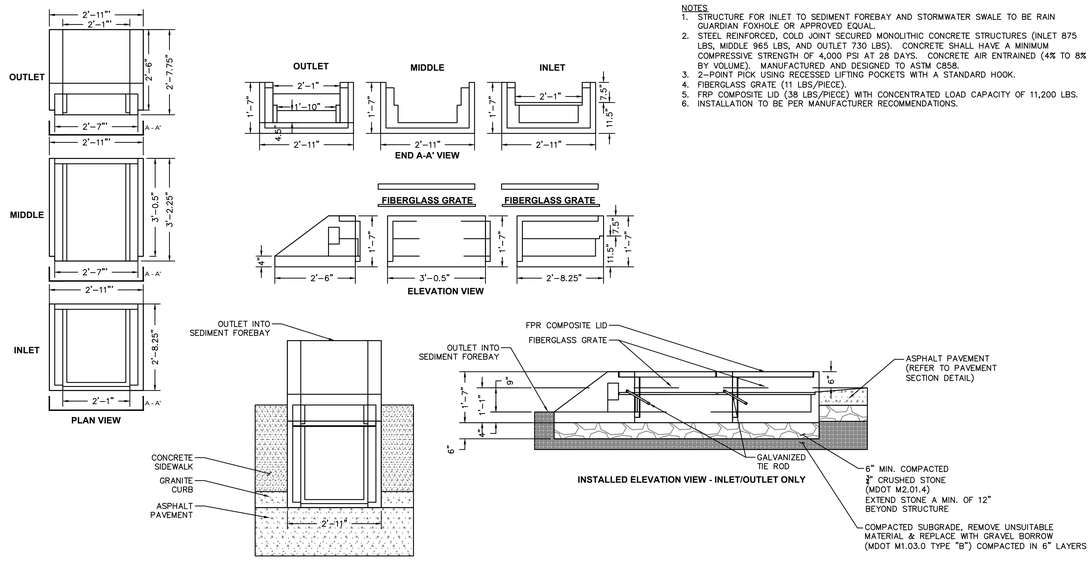

NOTES:
1. STRUCTURE FOR INLET TO SEDIMENT FOREBAY AND STORMWATER SWALE TO BE RAIN GUARDIAN FOXHOLE OR APPROVED EQUAL.
2. STEEL REINFORCED, COLD JOINT SECURED MONOLITHIC CONCRETE STRUCTURES (INLET 875 LBS, MIDDLE 965 LBS, AND OUTLET 730 LBS). CONCRETE SHALL HAVE A MINIMUM COMPRESSIVE STRENGTH OF 4,000 PSI AT 28 DAYS. CONCRETE AIR ENTRAINED (4% TO 8% BY VOLUME). MANUFACTURED AND DESIGNED TO ASTM C858.
3. 2-POINT PICK USING RECESSED LIFTING POCKETS WITH A STANDARD HOOK.
4. FIBERGLASS GRATE (11 LBS/PIECE).
5. FRP COMPOSITE LID (38 LBS/PIECE) WITH CONCENTRATED LOAD CAPACITY OF 11,200 LBS.
6. INSTALLATION TO BE PER MANUFACTURER RECOMMENDATIONS.

CURB INLET DETAIL - WITH GRATE (SEDIMENT FOREBAY, DISCHARGING TO STORMWATER SWALE)

NOT TO SCALE

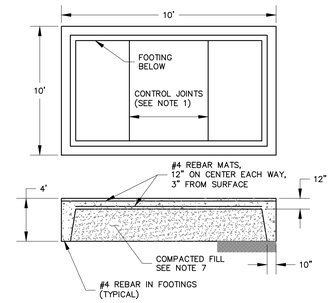

NOTES:
1. CONTROL JOINTS: 8' O.C. CUT 24 HRS. AFTER FINISH – 1.5"ø.
2. 4000 PSI CONCRETE @ 28 DAYS.
3. 12" CONCRETE TRANSFORMER PAD ON COMPACTED FILL, MONOLITHIC POUR.
4. SEE GENERATOR SUBMITTALS FOR CONDUIT STUB UP DETAILS.
5. PAD SHALL BE INSTALLED FLUSH GROUND SURFACE.
6. FOOTING TO BE SET ON UNDISTURBED SOIL.
7. COMPACTED TO BE PLACED & COMPACTED IN 6" LIFTS, COMPACTED TO 95% COMPACTION.

CONCRETE TRANSFORMER PAD DETAIL

NOT TO SCALE

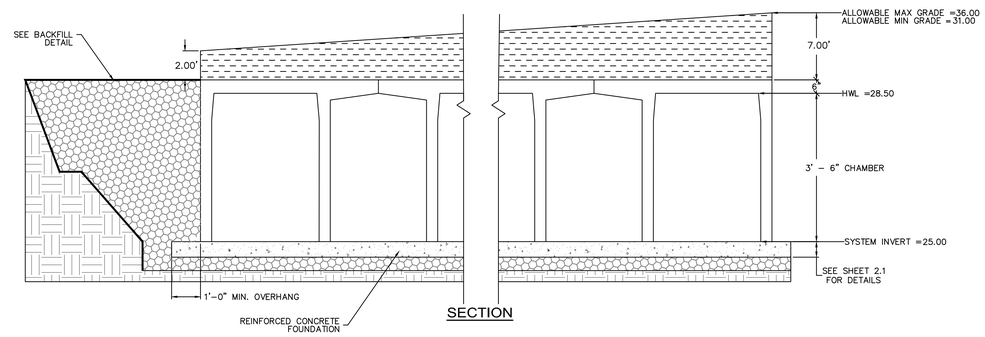

SECTION

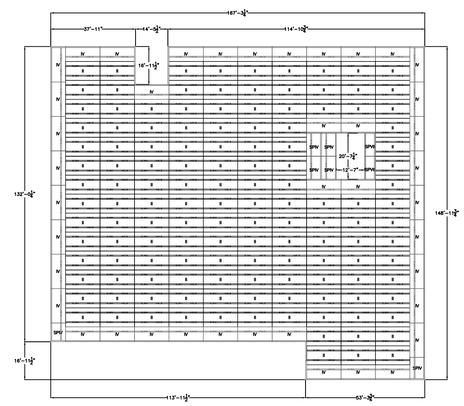

PLAN

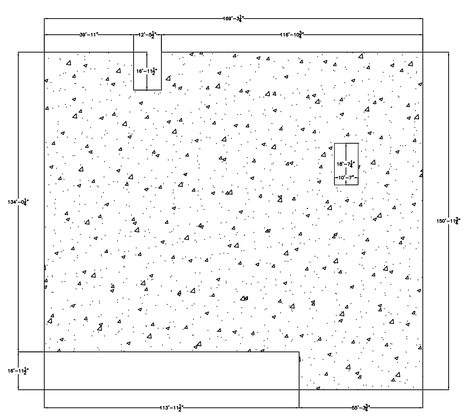

FOUNDATION PLAN

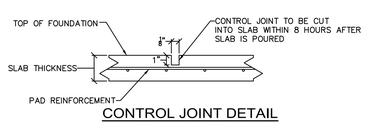

CONTROL JOINT DETAIL

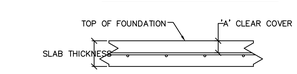

FOUNDATION DETAIL

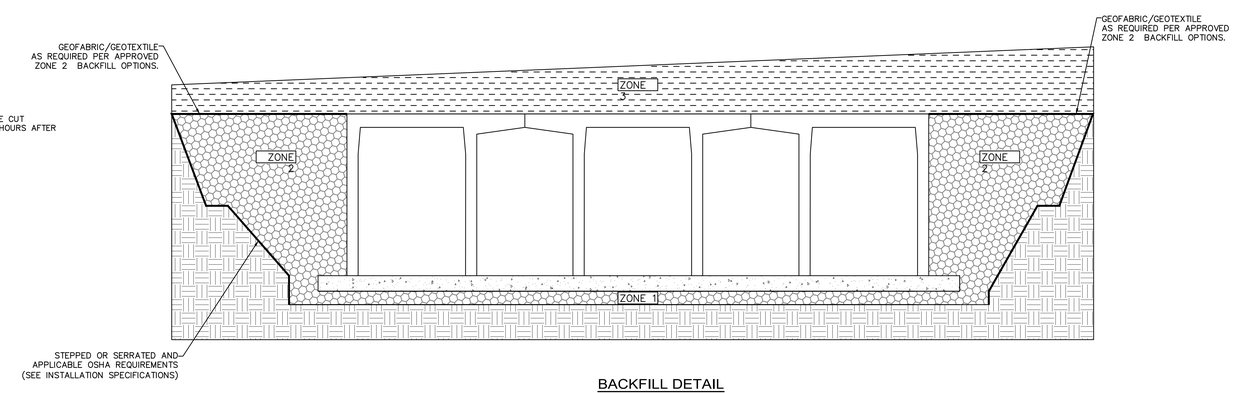

BACKFILL DETAIL

NOTES:
1. FINAL PRODUCT TO BE SUBMITTED AND APPROVED BY THE DESIGN ENGINEER PRIOR TO CONSTRUCTION

DETENTION BASIN #1

NOT TO SCALE

DORE + WHITTIER
MASSACHUSETTS
260 MERRIMAC ST. BUILDING 7, 2ND FLOOR
NEWBURYPORT, MA 01950
P. 978-499-2999
VERMONT
212 BATTERY STREET
BURLINGTON, VT 05401
P. 802.863.1433
WWW.DOREANDWHITTIER.COM

Nitsch Engineering
www.nitschengineering.com
2 Center Plaza, Suite 430
Boston, MA 02108
T: (617) 338-0063
F: (617) 338-6472
- Civil Engineering
- Land Surveying
- Transportation Engineering
- Structural Engineering
- Smart Infrastructure
- Planning
- GIS

PROJECT NUMBER:

SEAL AND SIGNATURE:

REVISIONS:

NO.	DATE	TITLE

PENTUCKET REGIONAL SCHOOL DISTRICT BUILDING PROJECT

24 MAIN STREET
WEST NEWBURY, MA 01985

ISSUE TITLE AND DATE:

PLANNING BOARD APPLICATION - REVISED
01/31/2020

SHEET TITLE:
SITE UTILITY DETAILS

SHEET NUMBER:
C4.04

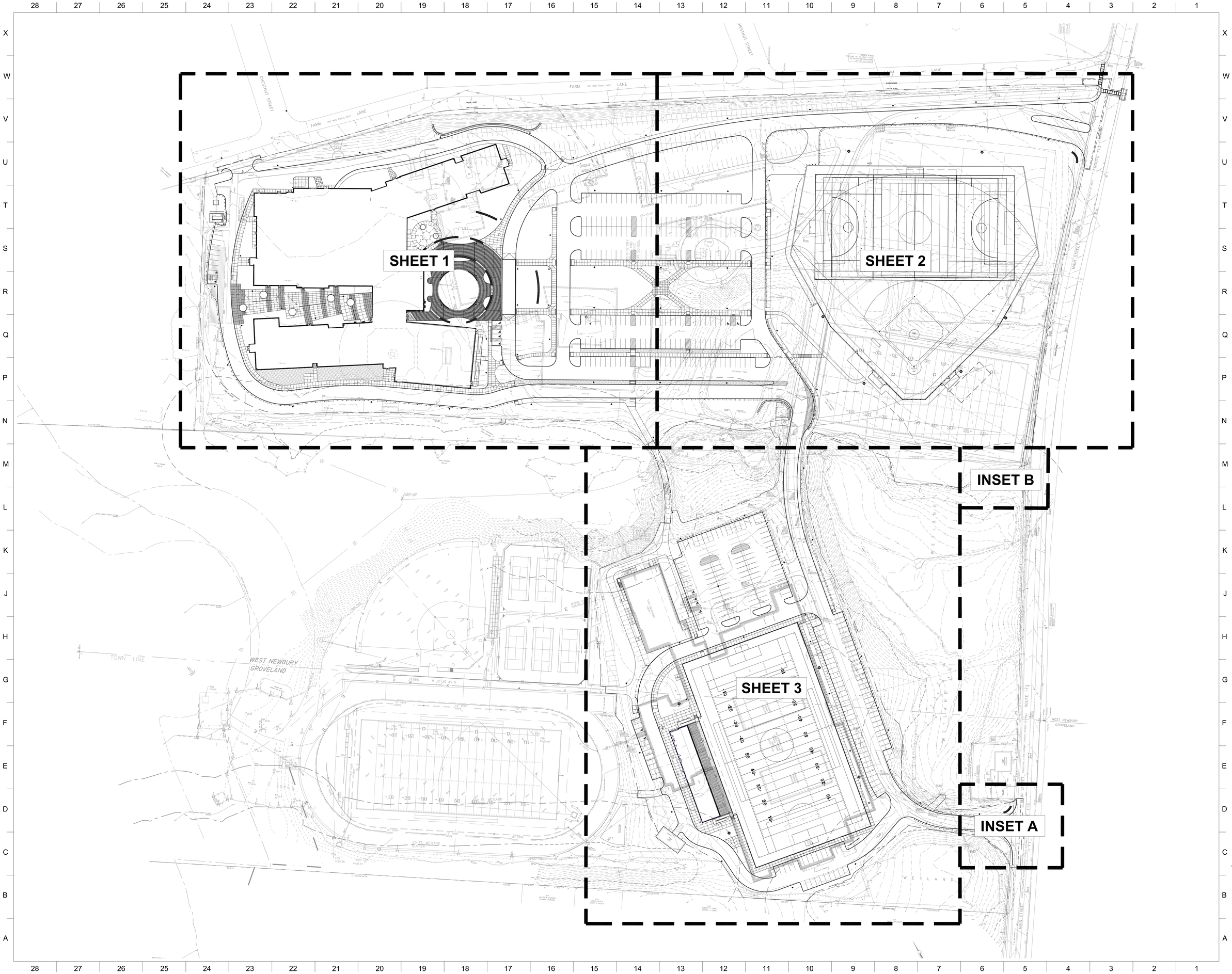

DORE + WHITTIER

DORE + WHITTIER ARCHITECTS, INC.

MASSACHUSETTS
10 MAIN STREET, BUILDING 7, 2ND FLOOR
NEWBURYPORT, MA 01950
P 978-499-2080

VERMONT
1 CHURCH STREET, 3RD STREET
BURLINGTON, VT 05401
P 802 863 1038

PROJECT NUMBER:
17-0762

SEAL AND SIGNATURE:

REVISIONS:

NO.	DATE	TITLE

PENTUCKET REGIONAL SCHOOL DISTRICT BUILDING PROJECT

24 MAIN STREET, WEST NEWBURY , MA 01985

ISSUE TITLE AND DATE:

PLANNING BOARD APPLICATION - REVISED

01/24/2020

TRUE NORTH

N

PROJECT NORTH

0 25' 50' 100'

SCALE: 1"=50'-0" GRAPHIC SCALE

SHEET TITLE:
SHEET LAYOUT PLAN - OVERALL

SHEET NUMBER:

L1.00

KEY PLAN

SCALE: NTS

LEGEND

R	RADIUS
EQ	EQUAL
SIM	SIMILAR
VIF	VERIFY IN THE FIELD
⌀	POINT OF TANGENCY
	CORNER OF BUILDING
	ALIGN
HC	HANDICAP CURB CUT RAMP
PL	PLANTING AREA
TYP.	TYPICAL

NOTES

1. REFER TO SPECIFICATIONS FOR FURTHER INFORMATION ON AND DEFINITIONS OF MATERIALS AND SITE IMPROVEMENTS SHOWN ON THIS PLAN.
2. REFER TO CIVIL DRAWINGS FOR:
   - 2.1. VEHICULAR PAVING AND CURBING.
   - 2.2. VEHICULAR PAVING AND CURBING LAYOUT.
   - 2.3. LINE PAINT AND LAYOUT OF CROSSWALKS, STOP LINES, PARKING SPACES, HANDICAPPED PARKING MARKINGS AND ALL OTHER PAVEMENT MARKINGS.
   - 2.4. DIMENSIONS SHOWN ARE FOR REFERENCE ONLY.
3. REFER TO ELECTRICAL DWGS. FOR FURTHER INFORMATION ON SITE LIGHTING.
4. CONTRACTOR TO FIELD VERIFY ALL SIDEWALK ELEVATIONS AND CURB CONDITIONS PRIOR TO INSTALLATION OF CROSSWALKS AND CURB CUTS ACROSS THE ABUTTING STREETS.
5. IT IS ASSUMED, TOTAL STATION OR SIMILAR WILL BE USED TO LAYOUT THE SITE IMPROVEMENTS.

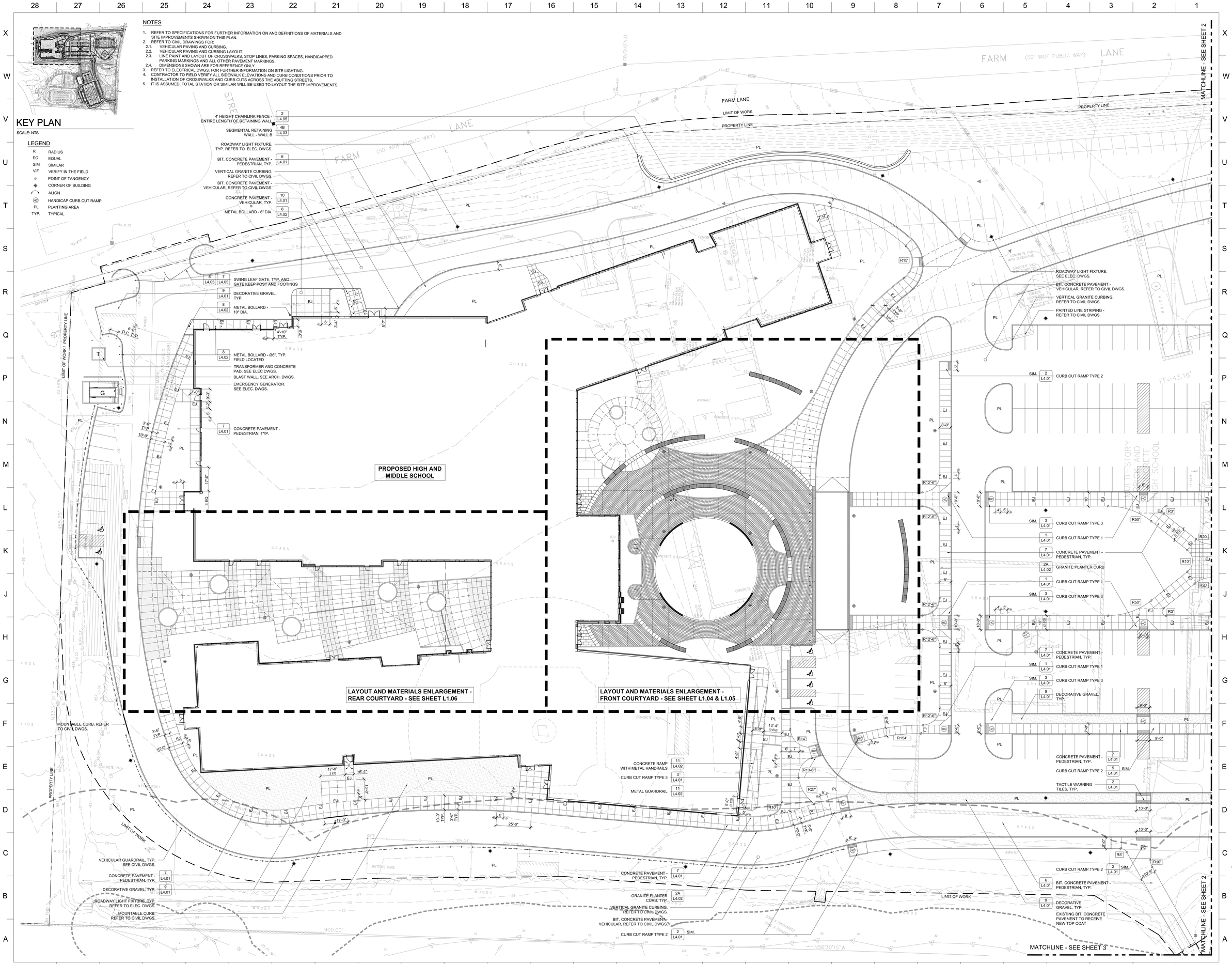

DORE + WHITTIER

DORE + WHITTIER ARCHITECTS, INC.

MASSACHUSETTS
60 CENTRAL STREET, BUILDING 7, 2ND FLOOR
NEWBURYPORT, MA 01950
P 978-499-2369

VERMONT
1 CHURCH STREET, 5TH STREET
BURLINGTON, VT 05401
P 382-863-1038

PROJECT NUMBER:
17-0762

SEAL AND SIGNATURE:

REVISIONS:

NO.	DATE	TITLE

PENTUCKET REGIONAL SCHOOL DISTRICT BUILDING PROJECT

24 MAIN STREET, WEST NEWBURY , MA 01985

ISSUE TITLE AND DATE:

PLANNING BOARD APPLICATION - REVISED
01/24/2020

TRUE NORTH
N
PROJECT NORTH

0 10' 20' 40'
SCALE: 1"=20'-0" GRAPHIC SCALE

SHEET TITLE:
LAYOUT AND MATERIALS PLAN - SHEET 1

SHEET NUMBER:
L1.01

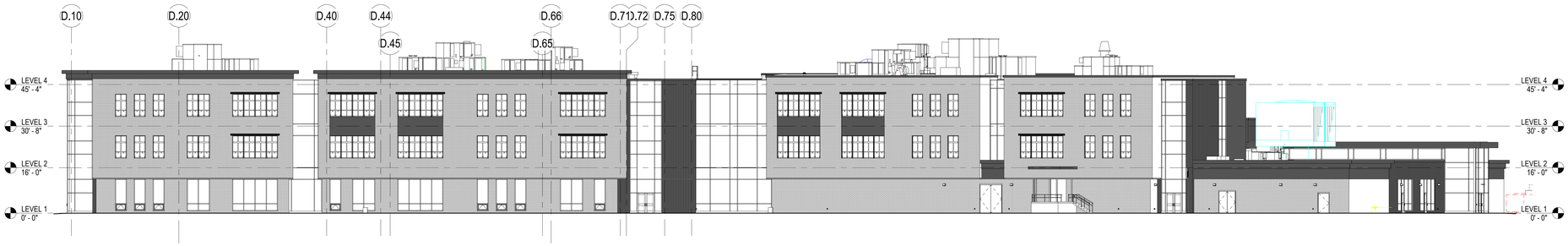

T25 OVERALL NORTH ELEVATION
1/16" = 1'-0"

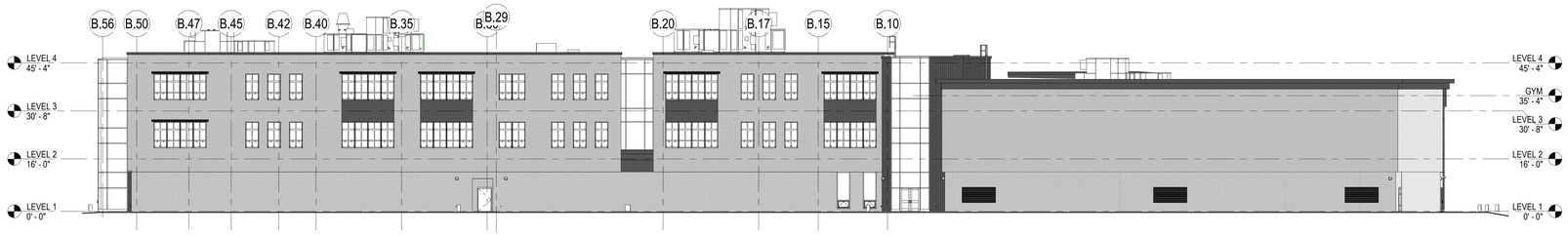

N25 OVERALL SOUTH ELEVATION
1/16" = 1'-0"

H25 OVERALL EAST ELEVATION
1/16" = 1'-0"

C25 OVERALL WEST ELEVATION
1/16" = 1'-0"

dw
DORE + WHITTIER
DORE + WHITTIER ARCHITECTS, INC.
MASSACHUSETTS
60 CHESTNUT STREET, BUILDING 7, 2ND FLOOR
NEWBURYPORT, MA 01950
P 978-499-2990
VERMONT
20 CENTER STREET
ST. JOHNSBURY, VT 05847
P 802-963-1929

PROJECT NUMBER:
17-0762

SEAL AND SIGNATURE:

REVISIONS:

NO.	DATE	TITLE

PENTUCKET REGIONAL SCHOOL DISTRICT BUILDING PROJECT

24 MAIN STREET
WEST NEWBURY, MA 01985

ISSUE TITLE AND DATE:
PLANNING BOARD APPLICATION - REVISED
01/24/2020

TRUE NORTH
N
PROJECT NORTH

0 8' 16' 32'
SCALE: 1/16"=1'-0" GRAPHIC SCALE

KEY PLAN

SHEET TITLE:
OVERALL EXTERIOR ELEVATIONS

SHEET NUMBER:
A4.10

C:\Users\jhagan\Documents\ARCH1 - 762 - PENTUCKET HS-MS_jhagan.rvt

1/17/2020 6:15:26 PM

Luminaire Schedule									
Symbol	Qty	Label	Total Lamp Lumens	LLF	Description	Lum. Watts	Total Watts	Lum. Eff.(%)
	26	G01 - US Architectural Viper-	N.A.	0.810	VPRR-VLED-VSQ-64LED-350mA-NW	69.4	1804.4	N.A.
	27	S1 - DSX1_LED_P7_40K_T4M_MVOLT	N.A.	0.300	DSX1 LED P7 40K T4M MVOLT	183	4941	N.A.
	28	S2 -DSX1_LED_P7_40K_T2M_MVOLT	N.A.	0.300	DSX1 LED P7 40K T2M MVOLT	183	5124	N.A.
	2	S3 - DSX1_LED_P7_40K_T4M_MVOLT	N.A.	0.300	DSX1 LED P7 40K T4M MVOLT	183	732	N.A.

PHOTOMETRIC GENERAL NOTES:

1. VANDERWEIL ENGINEERS, LLP LIGHTING CALCULATION ESTIMATES ARE PROVIDED TO ASSIST THE DESIGN TEAM IN MAKING LIGHTING DECISIONS BASED ON VARIOUS ASSUMPTIONS AND FACTORS. EFFORTS HAVE BEEN MADE TO ENSURE ACCURATE ASSUMPTIONS IN DEVELOPING THE LIGHTING MODEL.
2. LIGHTING CALCULATION BASED ON CEILING HEIGHT PROVIDED BY ARCHITECT.
3. LIGHTING CALCULATION BASED ON 80/50/20 REFLECTANCE.
4. LIGHTING CALCULATION BASED ON WORKING HEIGHT OF 30" ON GROUND.
5. LIGHTING CALCULATION BASED ON LIGHT LOSS FACTOR OF 0.8.

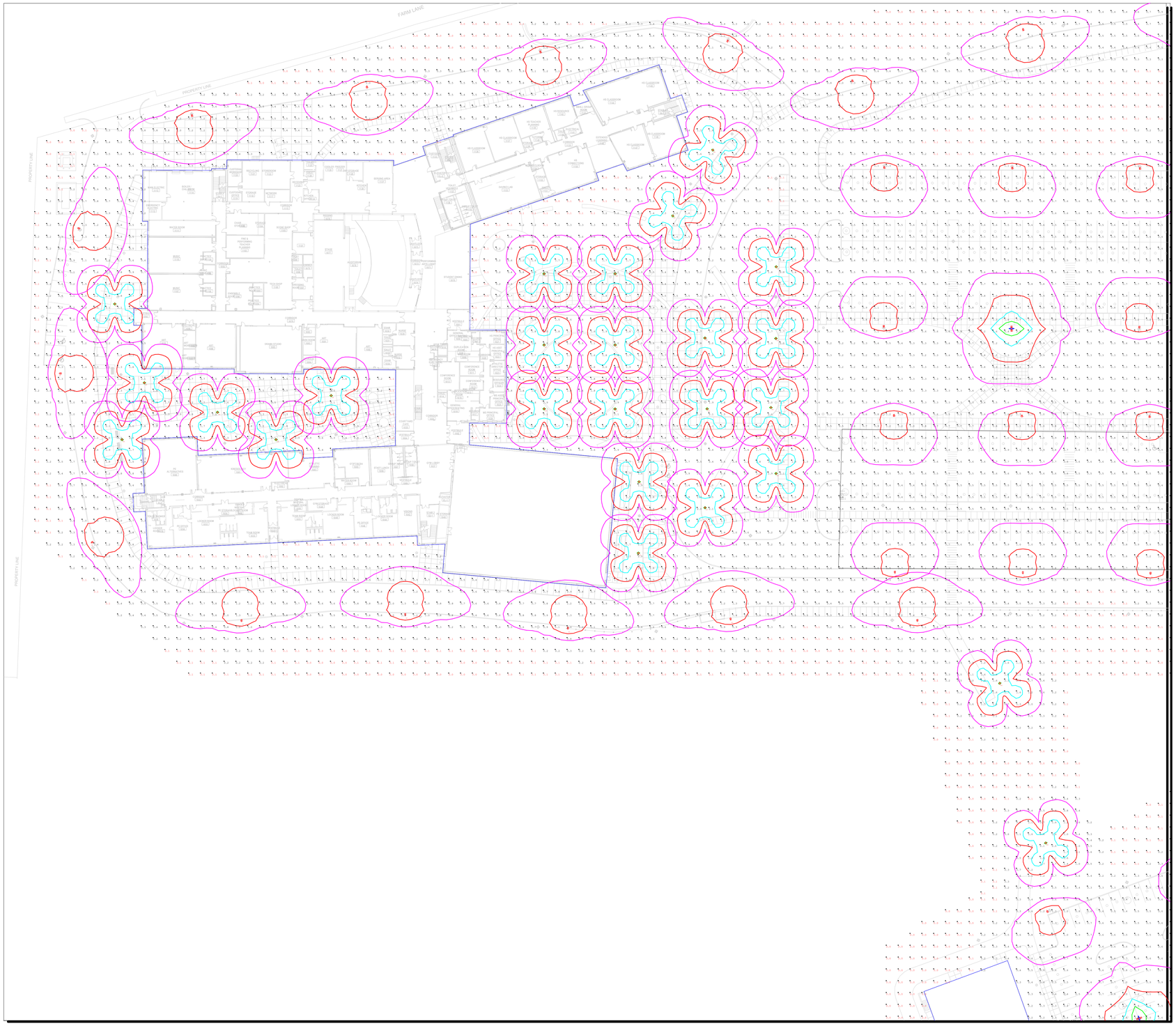

Scale: 1 inch= 6 Ft.

Calculation Summary						
Label	CalcType	Units	Avg	Max	Min	Max/Min
Main Courtyard	Illuminance	Fc	0.00	0.0	0.0	N.A.

PLANNING BOARD
APPLICATION - REVISED
01/24/2020

VANDERWEIL
P.G. Vanderweil Engineers, LLP
274 Summer Street
Boston, MA 02210
617.423.7423 TEL
617.423.7401 FAX
vanderweil.com

Scale: As Noted

Project

Site Lighting
Sheet 1
Revised

Drawing Number:

LT-101